RE-ORDER NO. 68-164

ENGINEERING REPORT

OGO-F SEARCH COIL MAGNETOMETER

CONTRACT NO. 951630

Prepared For

JET PROPULSION LABORATORY

This work was performed for the Jet Propulsion Laboratory, California Institute of Technology, sponsored by the National Aeronautics and Space Administration under Contract NAS7-100.

MARSHALL LABORATORIES
3530 Torrance Boulevard
Torrance, California

N69-16869
(ACCESSION NUMBER)
348
(PAGES)
CR 73646
(NASA CR OR TMX OR AD NUMBER)
(THRU)
1
(CODE)
14
(CATEGORY)
JAN 26 1968
FACILITY FORM 602

ENGINEERING REPORT
OGO-F-22 SEARCH COIL MAGNETOMETER
CONTRACT NO. ?51630

Prepared By: George R. McMillen
for Richard Entenmann
Design Engineer

Robert J. Nahabit
Robert J. Nahabit
Project Engineer

Approved By: Robert Kobayashi
Robert Kobayashi
Program Engineer

E. Azari
for D. L. Chinburg
Program Manager

JAN 26 1968

MARSHALL LABORATORIES
3530 Torrance Boulevard
Torrance, California

ACKNOWLEDGEMENT

The authors wish to express their gratitude to all Jet Propulsion Laboratory and Marshall Laboratories personnel who contributed maximum effort in developing the OGO-F-22 Search Coil Magnetometer and in the preparation of this document.

ABSTRACT

The OGO-F Triaxial Search Coil Magnetometer was designed to measure geomagnetic and interplanetary field fluxuations in the frequency range of less than .01 Hz to above 1000 Hz. The search coil sensor, a critically dampened inductor, consists of 100,000 turns of wire wound on a nickel-steel laminated core. The basic sensitivity of the sensor is approximately 10 μvolts (μv)-per gamma (γ)-per Hertz (Hz). A low noise d-c preamplifier with a high input impedance (10^9 ohms), low input capacity (10 picofarads), and a gain of one hundred is located within the sensor housings which are boom mounted experiments on the spacecraft. The main electronics assembly located in the main body of the spacecraft, further amplifies the data from each preamplifier, performs a triaxial spectrum analysis, and generates seven (7) commutated outputs per axis, each a measure of the energy in a given frequency band. Other functions provided by the main assembly are (1) real time data, (2) wideband f-m data, (3) in-flight calibration, (4) gain state data, and (5) operating power conversion and regulation. Special equipment requirements included a portable Bench Test Equipment (BTE) mounted in two packages. The function of the first package is to simulate all spacecrart interface signals during preflight calibration and testing of the magnetometer. The second package will monitor the performance of the instrument even while it is being exercised by the spacecraft.

TABLE OF CONTENTS

5

7

ILLUSTRATIONS

RO 68-164

9

12

LIST OF PHOTOGRAPHS

13

LIST OF DRAWINGS BY DRAWING NUMBER

RU 68-164

LIST OF DRAWINGS BY PAGE NUMBER

RO 68-164

15

1.0 INTRODUCTION

This engineering report describes the OGO-F-22 Triaxial Search Coil Magnetometer delivered by Marshall Laboratories in compliance with JPL Contract No. 951630.

The function of the magnetometer is to measure the geomagnetic and interplanetary field fluxuations in the range of 0.01 to 1000 Hz.

This report covers the electrical functional, thermal, mechanical, spacecraft interface characteristics and circuit descriptions of the instrument. A description of the Bench Test Equipment is also included.

2.0 SYSTEM DESCRIPTION

Figure 1 shows the system block diagram and Figure 2 shows the functional block diagram of the OGO-F Triaxial Search Coil Magnetometer.

Physically, the instrument consists of four assemblies, three monaxial sensor-preamplifiers, and a main body electronics assembly.

Functionally, the instrument consists of three identical monaxial subsystems, a logic control subsystem, and a power supply subsystem. Each monaxial subsystem contains a search coil sensor which converts the rate of change of its axis' magnetic field component into a proportional voltage, a preamplifier, and three channels for signal processing. The channels are waveform, spectrum, and SCO.

The waveform channel amplifies the low frequency signal components that extend from below 0.01 Hz to above 4, 8, 16, 32 or 64 Hz. The upper limit is determined by spacecraft and instrument modes.

The spectrum analyzer channel amplifies the high frequency signal components, between 1 Hz and 1 KHz, filters this signal into seven frequency components centered at 10, 22, 47, 100, 216, 550, and 1,000 Hz, converts the magnitude of the frequency component to D.C. by peak detecting, and sequentially samples and sums each of the seven subchannels intc a single composite signal.

The SCO (subcarrier oscillator) channel receives its input signal from the spectrum channel and uses the instantaneous signal amplitude to frequency modulate a voltage controlled oscillator. Each axis has a unique SCO carrier frequency, these are 40, 52.5, and 70 KHz. The SCO signals from the three axes are combined in a common output amplifier into a single composite SCO signal.

The logic subsystem receives spacecraft generated timing and control signals and ground generated command signals. From these inputs, the logic subsystem generates digital signals that control the gain, bandwidth, and mode of the signal processing channels. The logic subsystem also generates instrument status output signals.

The power supply subsystem receives 28 VDC power and sync from the spacecraft. Using a synchronized power converter, it generates all DC voltages used in the instrument.

Figure 3 shows the interface wiring drawing which depicts all interconnections between the four assemblies, as well as all connections to the spacecraft and the signals on the instrument test connector. Figure 4 shows the thermal schematic drawing which depicts the thermal properties of each of the assemblies.

2

B

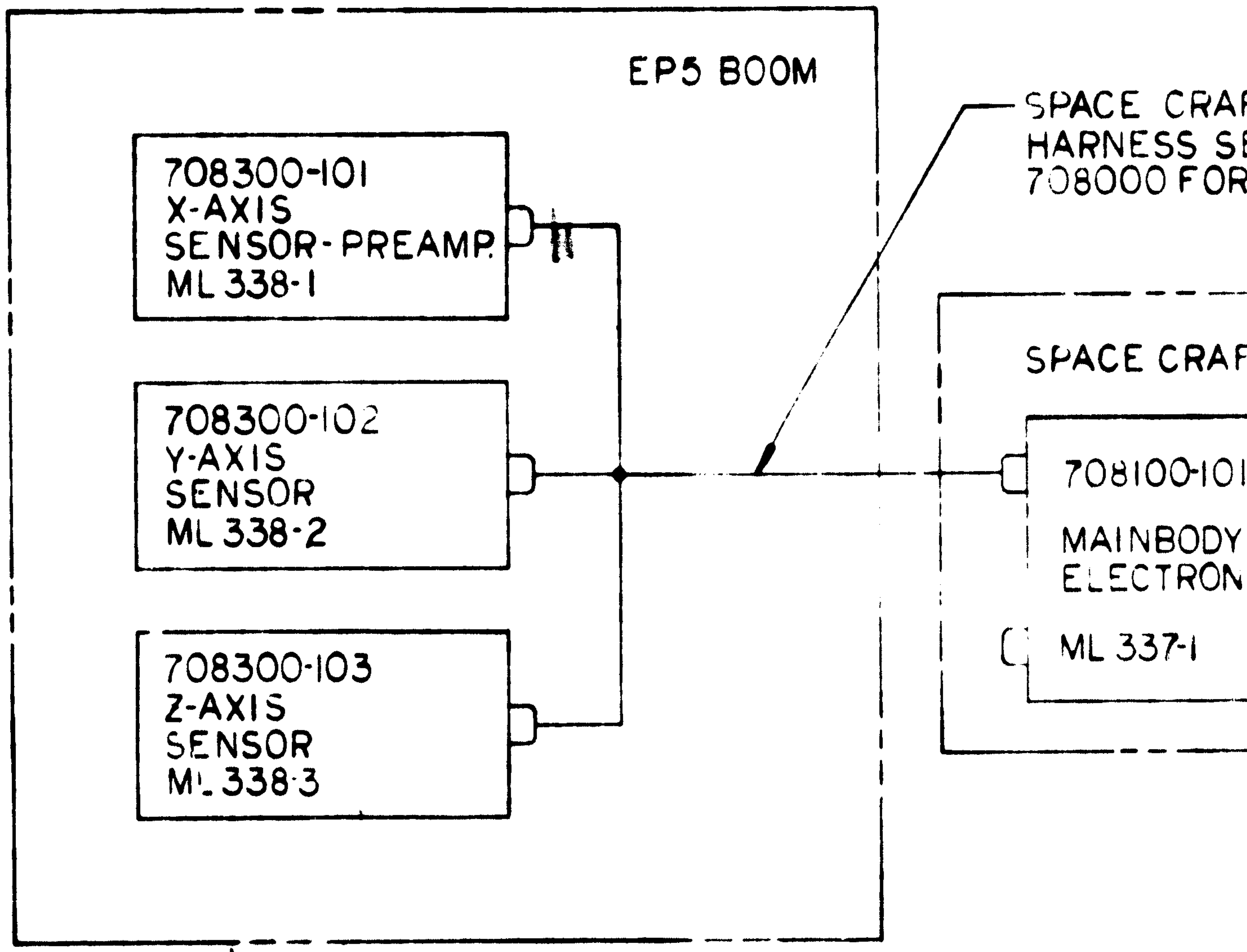

A

REF							708004
							708003
							708002
							708000
REF							708006
1							708100-101
1							708300-103
1							708300-102
1							708300 101
-101							PART NO
QTY REQD PER NOTED ASSY							
CONFIGURATION							INTERPRET THIS DRA STANDARDS IN MIL
LAYOUT NO							DIMENSIONS ARE I
DIST CODE	T-OB H						TOLERANCES

DECIMALS
X ± 1
XX ± 03
XXX ± 010 XXXX

✓ SURFACE ROU

HOLE DIA T
0135 THRU 125 +
126 THRU 250 +
251 THRU 500 +
501 THRU 750 +
751 THRU 1 000 +
1 000 THRU 2 000 +
2 001 AND OVER

-101	ML349-1	FINAL	—	—	—
DASH NO	MODEL NO	NEXT ASSEMBLY	MODEL NO	FINAL ASSEMBLY	MODEL NO
APPLICATION					

FOLDOUT FRAME 1

ML FORM 192

2

PARTS DISPOSITION	DWG NO	REV
1 USE 2 REWORK 3 CANNOT BE REWORKED 4 RECORD 5	708010	

REVISIONS

DISP	EFF	ZONE	REV	DESCRIPTION	BY	CK	DATE	APPROVAL

SPACE CRAFT FURNISHED HARNESS SEE ML DWG. 7_5000 FOR NOMENCLATURE

SPACE CRAFT BODY

708100-101

MAINBODY ELECTRONIC ASSY

ML 3371

B

PART NO	SPECIFICATION	NOMENCLATURE OR DESCRIPTION	ELEC REF DES	CODE IDENT	ZONE	ITEM NO.
708004		THERMAL DIAGRAM				9
708003		ENVELOPE, SENSOR				8
708002		ENVELOPE, ELECTRONIC UNIT				7
708006		INTERFACE WIRING DIAGRAM				6
70807[illegible]		BLOCK DIAGRAM				5
708100-101		ELECTRONIC UNIT				4
708300-103		SENSOR Z AXIS				3
708300-102		SENSOR, Y-AXIS				2
708300-101		SENSOR, X-AXIS				1

A

LIST OF MATERIALS

INTERPRET THIS DRAWING PER STANDARDS IN ML D 70322

DIMENSIONS ARE IN INCHES

TOLERANCES ON

DECIMALS / ANGLES

.X ± .1 / ± 0° 30'

.XX ± .01

.XXX ± .010 / .XXXX ± .0050

SURFACE ROUGHNESS

HOLE DIA / TOLERANCE [illegible]

CONTRACT NO JPL 951630

DRAWN [illegible] DATE 4-17-67

CHECK Podskalan 5-22-67

[illegible] 5/2_/67

[illegible] 5/23/67

APPD [illegible] 5/23/67

DESIGN ACTIVITY APPD [signature] 5-24-67

CUSTOMER

ML

MARSHALL LABORATORIES

TORRANCE, CALIFORNIA

TITLE

SEARCH COIL SYSTEM

OGO-F-22

SIZE	CODE IDENT NO	DWG NO.	REV
C	13126	708010	

SCALE — RELEASED MAY 24 1967 SHEET 1 OF 1

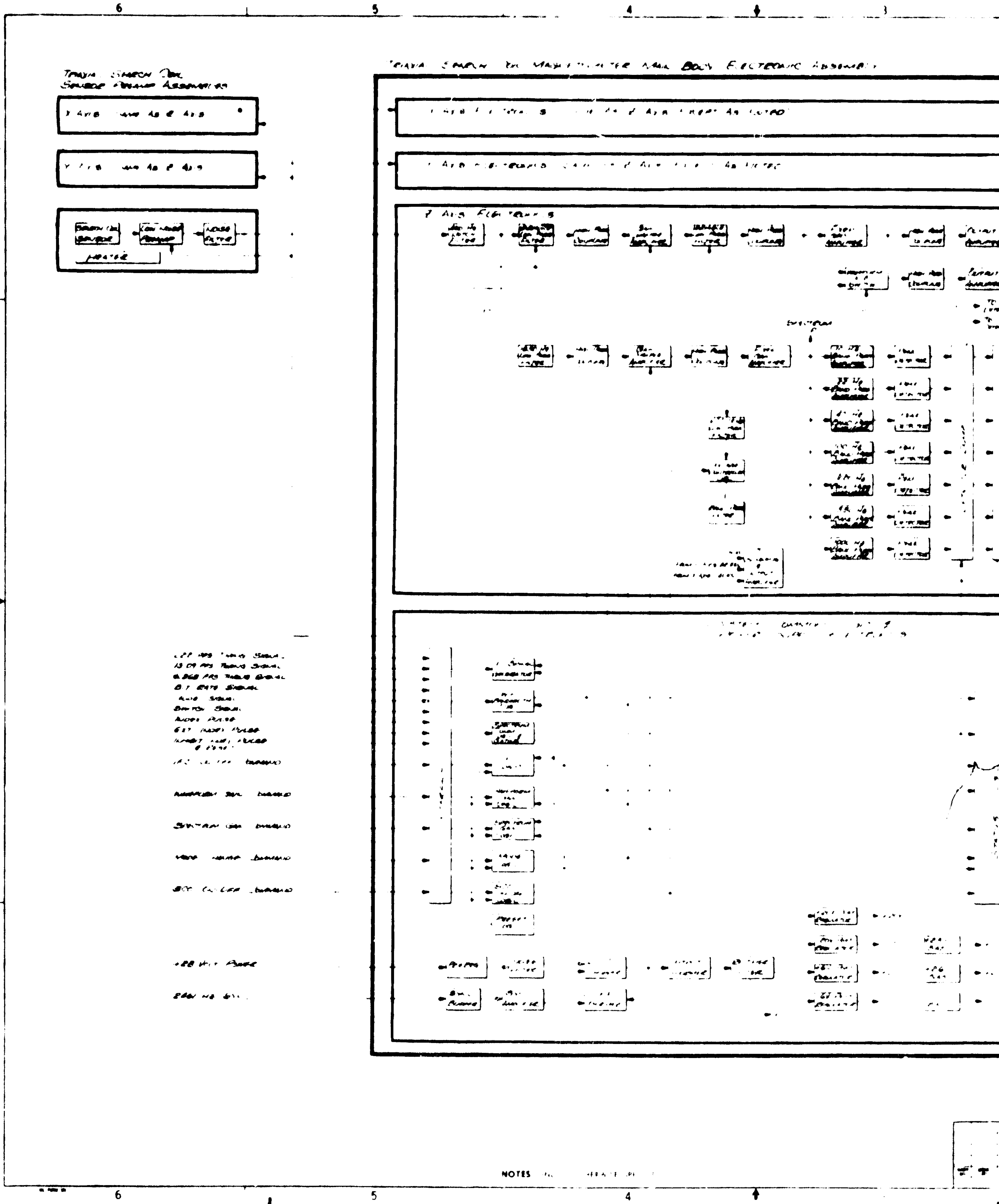
NOTES

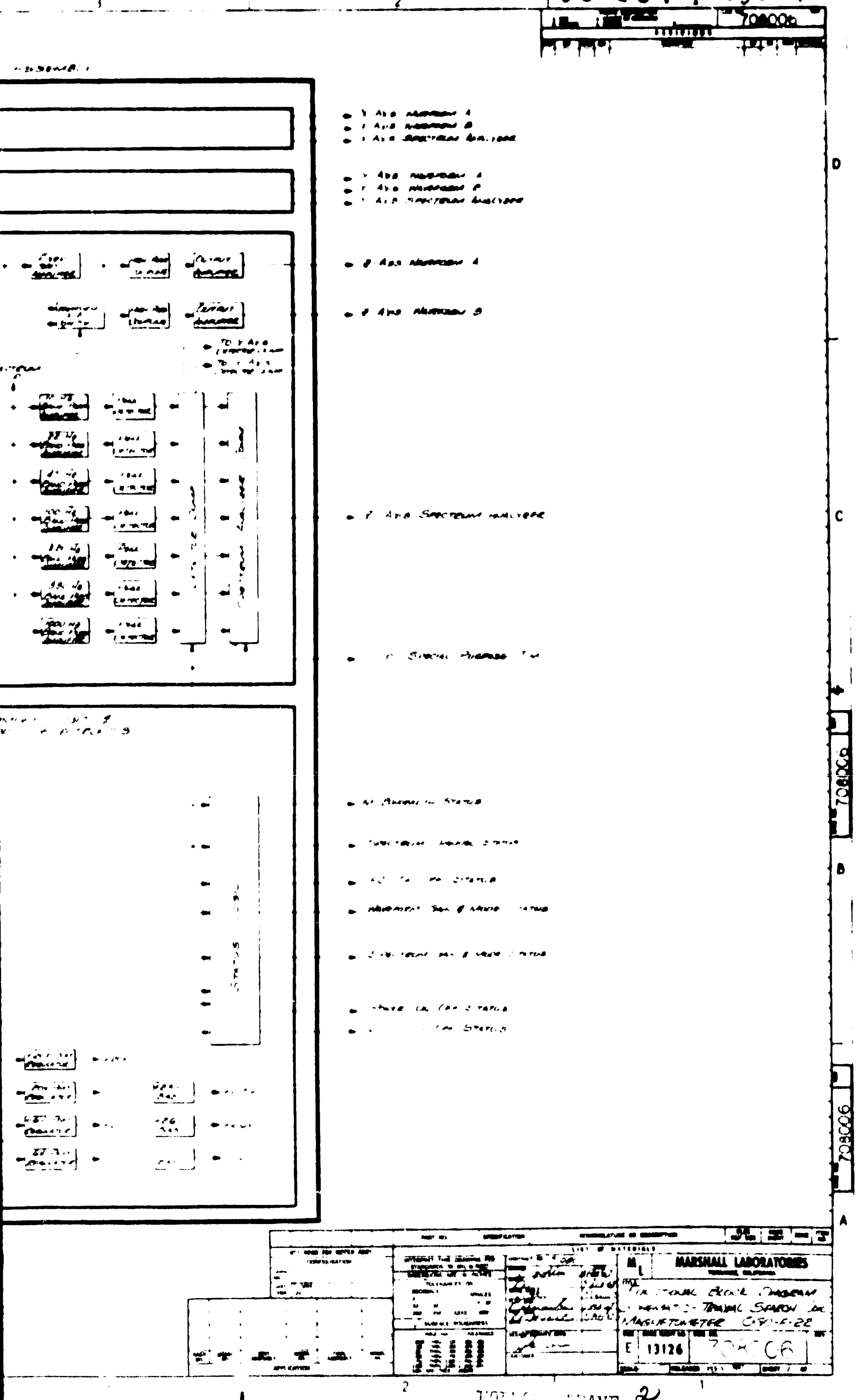
708006
D
C
B
A
MARSHALL LABORATORIES
E
13126
708006

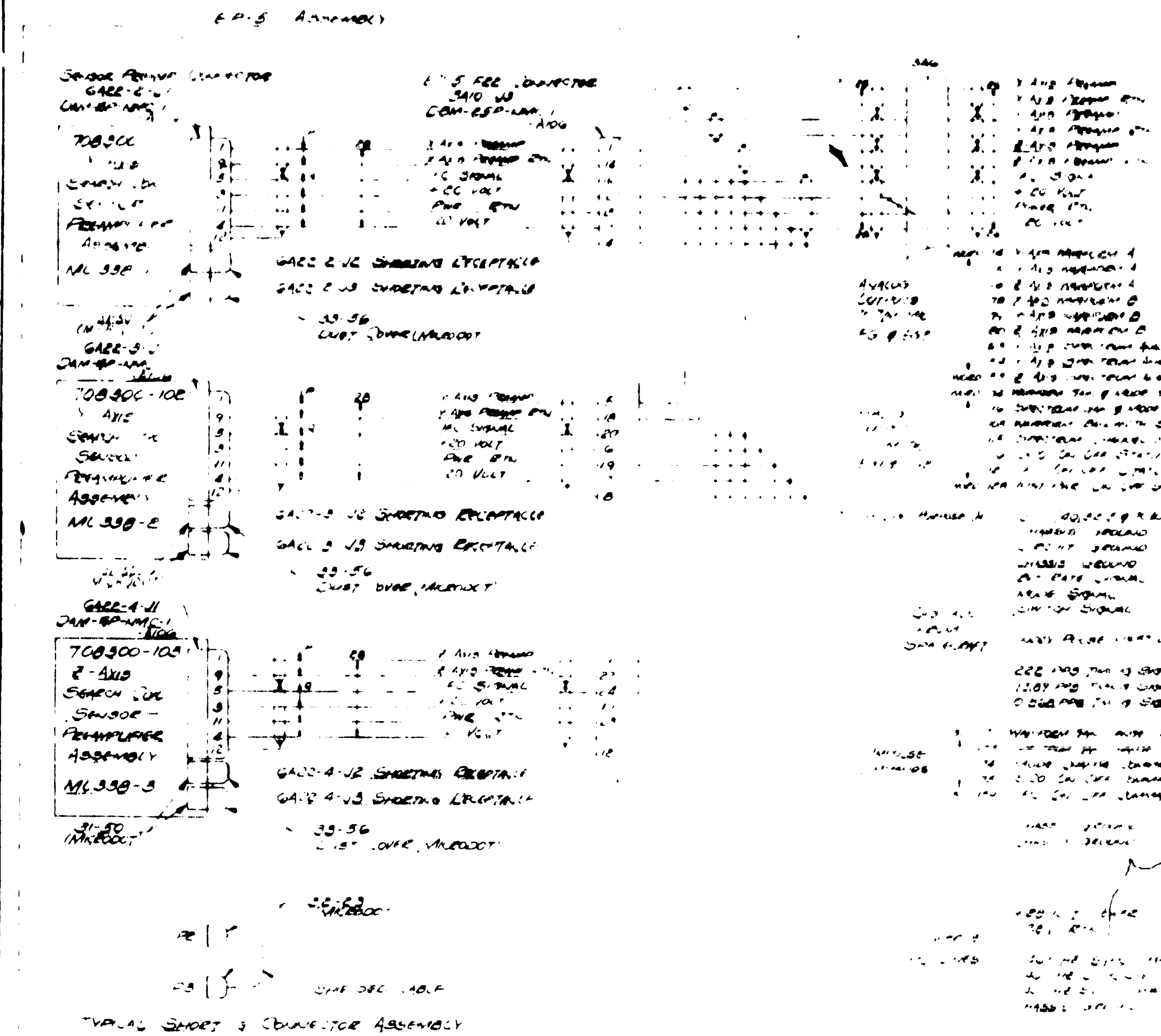

NOTES UNLESS OTHERWISE SPECIFIED

FRAME 1

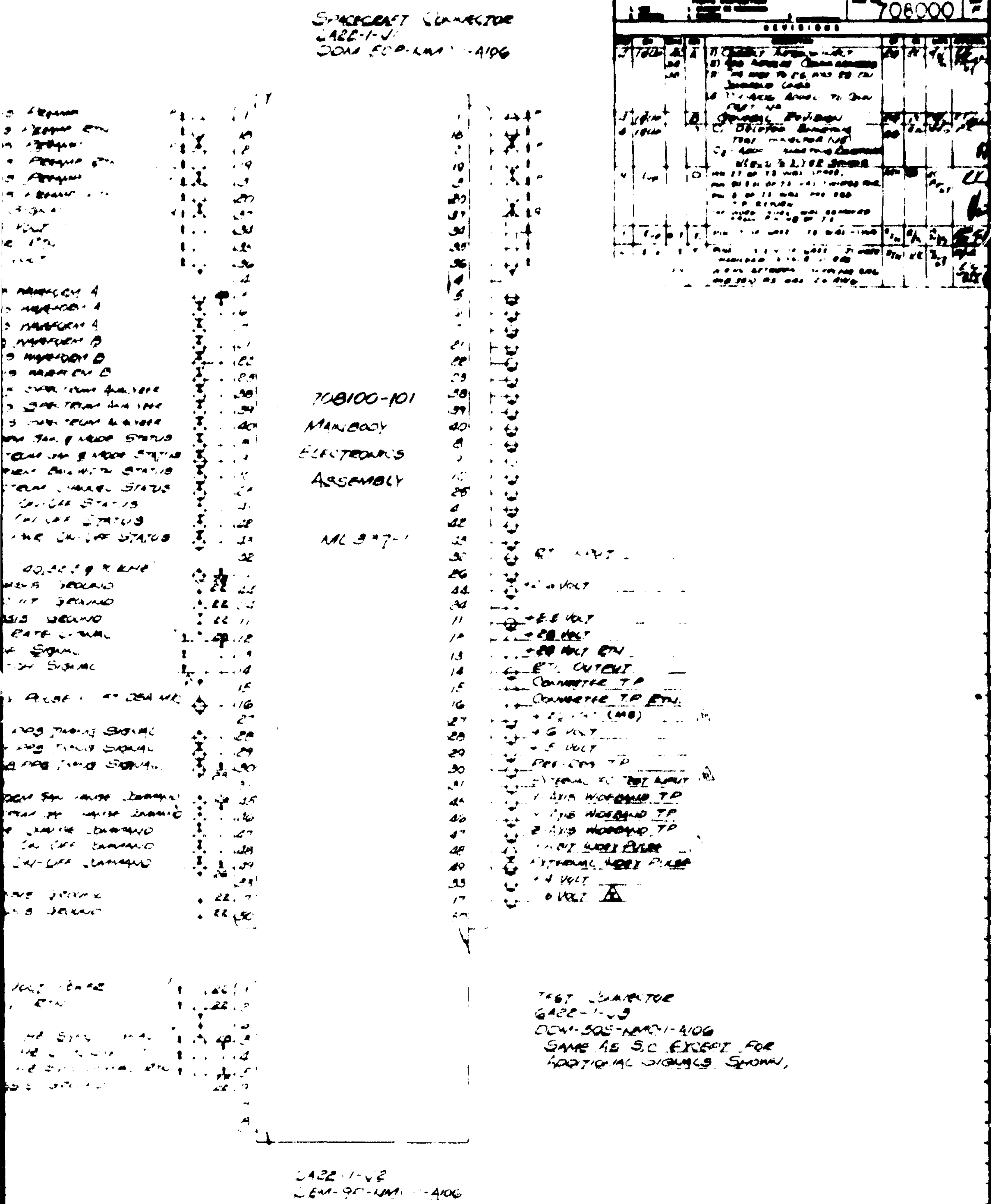

708000 F

MARSHALL LABORATORIES

WIRING INTERFACE DIAGRAM -
TRIAXIAL SEARCH COIL
MAGNETOMETER
OGO-F-22

F 13126 708000 F

LIST OF MATERIALS

APPLICATION

FRAME 2

2

B

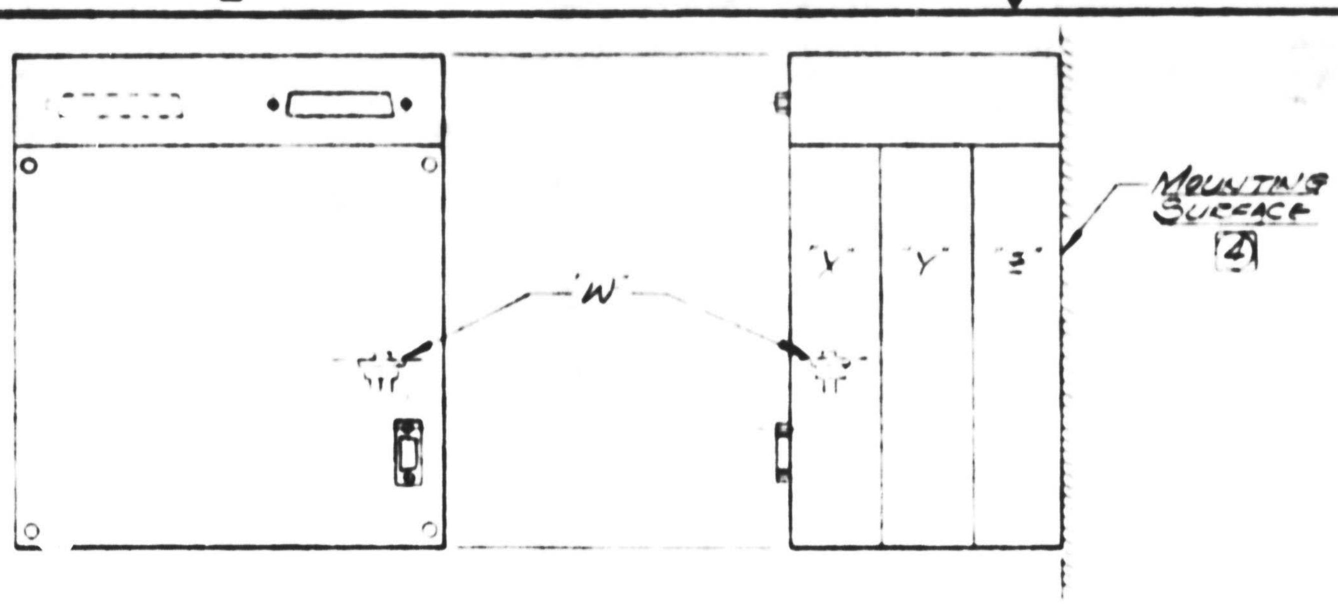

ELECTRONIC UNIT

THERMAL CHARACTERISTICS:

1. POWER DISSIPATION —
   - ZONE W, MAXIMUM 1.2 WATTS WITH MAXIMUM POWER INPUT.
   - ZONE "X", MAXIMUM 0.3 WATTS WITH NORMAL POWER INPUT.
   - ZONE Y, MAXIMUM 0.3 WATTS WITH NORMAL POWER INPUT.
   - ZONE Z, MAXIMUM 0.3 WATTS WITH NORMAL POWER INPUT.
2. ALL EXTERNAL SURFACES ARE ISOTHERMIC, EXCEPT MOUNTING SURFACE.
3. FINISH: PROTECTIVE PAINT (CAT-A-LAC, BLACK) PER MARSHALL LABS SPECIFICATION S40118, CLASS I, TYPE IV, PRIMED.

$\boxed{4}$ MOUNTING SURFACE: GOLD PLATED PER MARSHALL LABS SPEC. S40120, CLASS II

5. MAXIMUM OPERATING TEMPERATURE RANGE 0°C. TO +50°C.

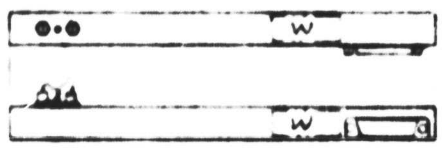

SENSOR (TYPICAL)

THERMAL CHARACTERISTICS:

1. POWER DISSIPATION: ZONE "W", 0.05 WATT WITH NORMAL POWER INPUT ABOVE +5°C. ±5°C;
   INTERNAL PROPORTIONAL HEATER DISSIPATION .40 WATT MAX BELOW +5°C.
2. ALL EXTERNAL SURFACES ARE ISOTHERMIC.
3. FINISH: PROTECTIVE PAINT (CAT-A-LAC, BLACK) PER MARSHALL LABS SPECIFICATION S40119, CLASS I, TYPE IV, PRIMED.
4. MAXIMUM OPERATING TEMPERATURE RANGE -50°C. TO +50°C.
5. SENSOR WILL REQUIRE AN ALUMINIZED MYLAR BLANKET, 15 LAYERS MINIMUM, TO MAINTAIN A TEMPERATURE OF 5°C ±5°C. WITHIN THE SENSOR.
6. SENSOR CABLE WILL REQUIRE AN ALUMINIZED MYLAR BLANKET, 15 LAYERS MINIMUM, TO MAINTAIN THERMAL ENVIRONMENT OF 5°C. ±5°C. WITHIN THE SENSOR.

A

QTY REQD PER NOTED ASSY					
CONFIGURATION					
LAYOUT NO					
DIST CODE	1-080 J				

	ML338-1				
	ML337-1				
DASH NO	MODEL NO	NEXT ASSEMBLY	MODEL NO	FINAL ASSEMBLY	MODEL NO
APPLICATION					

PART NO	SPECIFICATION

INTERPRET THIS DRAWING PER STANDARDS IN MIL D 70327

DIMENSIONS ARE IN INCHES

TOLERANCES ON

DECIMALS		ANGLES
X ± 1		± 0° 30'
XX ± 03		
XXX ± 010	XXXX ± 0050	

SURFACE ROUGHNESS

HOLE DIA			TOLERANCE	
0135	THRU	125	+ 004	001
126	THRU	250	+ 005	001
251	THRU	500	+ 006	001
501	THRU	750	+ 008	001
751	THRU	1 000	+ 010	001
1 000	THRU	2 000	+ 012	001
2 001	AND OVER		LINEAR	

CONTR
DRAWN
CHECK
MECH
FLEC
PROJ
APPR
DESIGN
CUSTO

PARTS DISPOSITION 1 USE 2 REWORK 3 CANNOT BE REWORKED 4 RECORD 5	DWG NO 708004	REV B

REVISIONS

DISP	EFF	ZONE	REV	DESCRIPTION	BY	CK	DATE	APPROVAL
4	1EUN	-	A	ADDED ADDITIONAL LEGENDS TO SENSOR THERMAL CHARACTERISTICS	[illegible]	RR	[illegible]	R/C
4	1&UP		B	ADDED TWO CONN TO F/D OF SENSOR	[illegible]	[illegible]	[illegible]	[illegible]

MOUNTING SURFACE
4

INPUT.
INPUT.
INPUT.
INPUT.
E.
TION

CLASS II

+5°C. ±5°C.
MAX BELOW +5°C. ±5°C.

B

A

SPECIFICATION	NOMENCLATURE OR DESCRIPTION	ELEC REF DES	CODE IDENT	ZONE	ITEM NO.

LIST OF MATERIALS

IS DRAWING PER
IN MIL D 70327
ARE IN INCHES
NCES ON
ANGLES
± 0° 30'
XXXX ± .0050
CE ROUGHNESS
TOLERANCE
± .004 .001
± .005 .001
± .006 .001
± .008 .001
± .010 .001
± .012 .001
LINEAR

CONTRACT NO 7-080

		DATE
DRAWN	L. Golden	2 Nov 66
CHECK	[illegible]	18 April
MECH ENG	[illegible]	18 April
ELEC	[illegible]	8 Nov 66
PROJ ENG	[illegible]	8 Nov 66
APPD		
DESIGN ACTIVITY APPD	[illegible]	11-8-66
CUSTOMER		

MARSHALL LABORATORIES
TORRANCE, CALIFORNIA

TITLE THERMAL DIAGRAM - TRIAXIAL SEARCH COIL MAGNETOMETER (OGO-F-22)

SIZE	CODE IDENT NO.	DWG NO.	REV
C	13126	708004	B

SCALE NONE | RELEASED NOV 9 1966 | SHEET 1 OF 1

2.1 Sensor-Preamplifier Assembly

Each sensor-preamplifier assembly contains a search coil sensor, a preamplifier, a proportional heater, and an R.F. Filter section. A block diagram is shown in figure 5.

2.1.1 Sensor Characteristics

Each search coil sensor consists of a core of high permeability magnetic material upon which is placed a multi-section coil containing 100,000 turns of continuous fine copper wire. The characteristics of each of these sensors is as follows:

A. Sensitivity: 10.0 ± 0.3 microvolts per gamma hertz

B. D.C. resistance: approx. 50K ohms

C. Inductance: approx. 1200 henries

D. Resonant frequency: 1,000 Hz ± 10%

E. Damping: critical

2.1.2 Preamplifier Electrical Characteristics

A. D.C. Gain: 101 ± 2

B. Frequency response: -1 (±0.5) db at 1 KHz
-3 (±1) db at 1.85 KHz

C. Input impedance: approx. 10^9 ohms shunted by 10 picofarads

D. Dynamic output impedance: approx. 100 ohms

E. Undistorted output signal capability: greater than 20 volts peak to peak from DC to 2 KHz into a load consisting of 50K ohm in parallel with 0.1 μf.

F. In-Flight Calibration (IFC) preamp gain: -1.00±0.02

G. Operating temperature: -50°C to +60°C

H. Input noise:
   1. Less than 0.25 microvolts rms from 0.01 to 1 Hz.
   2. Less than 0.01 microvolts squared per Hertz from 5 to 1,000 Hz.

I. Power dissipation: 65 ± 5% milliwatts

J. Input voltage at the preamp for full output. The equivalent nominal search coil voltage at the input of the preamplifier for full outputs to the spacecraft:
   1. Waveform A (high gain) 50 microvolts peak to peak
   2. Spectrum (high gain) 62 microvolts peak to peak
   3. SCO (spectrum in high gain) 250 microvolts peak to peak

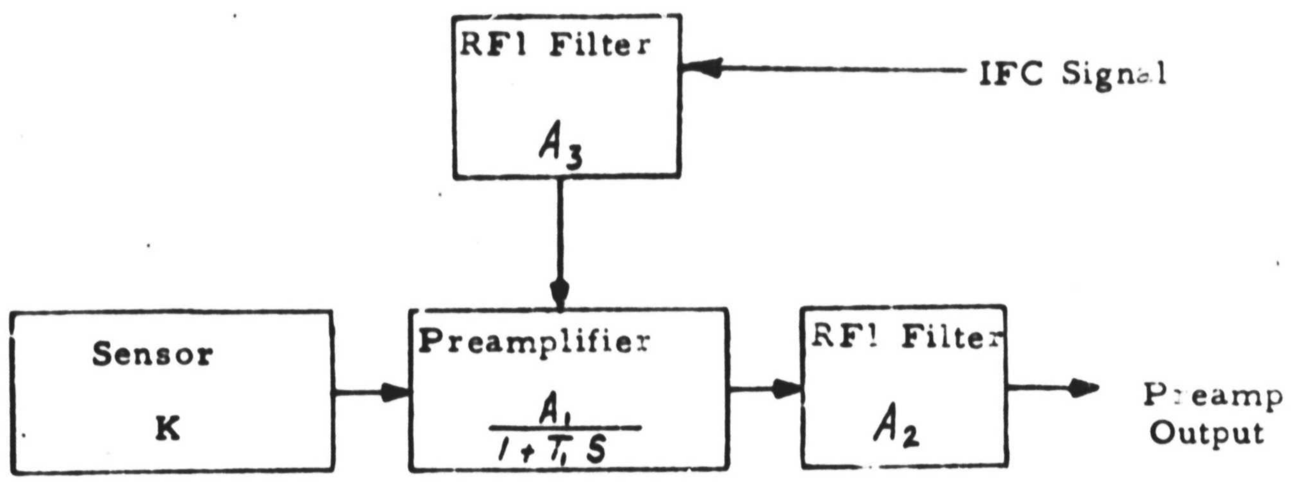

$A_1 = 101$ (For Sensor signal input)
$A_1 = -1.00$ (For IFC Signal input)
$A_2 = 1.00$
$A_3 = 1.00$
$T_1 = 83 \times 10^{-6}$ sec
$K = 10 \times 10^{-6}$ volts/γ Hz

Figure 5

Sensor-Preamplifier Block Diagram

2.1.3 Heater Electrical Characteristics

A proportional heater module is incorporated in the preamplifier assembly for operation at low ambient temperatures. The heater alone dissipates less than 13 milliwatts when its control thermistor is at temperatures above $+7^{\circ}C$ and $375 \pm 5\%$ milliwatts when below $+3^{\circ}C$.

2.1.4 Sensor - Preamp Assembly Power

The sensor - preamp assembly requires ± 20 volts regulated to 0.01%. The combined operating power of the preamp and heater is:

above $+7^{\circ}C$: $78 \pm 5\%$ milliwatts

below $+3^{\circ}C$: $440 \pm 5\%$ milliwatts .

2.1.5 Sensor - Preamp Mechanical Characteristics

Three assemblies are mounted orthogonally for X, Y, and Z within experiment package number 5 (EP-5 Boom). The sensor preamplifier envelope conforms to the drawing shown in Figure 6, page 10. The sensor housing is constructed of aluminum approximately .02 inches thick. The sensor, preamp, and heater are held in place within the housing by a light weight foam material. The housing cover is held in place by an epoxy adhesive. The housing is primed and painted with a Cat-aLac black epoxy. Figure 6A, page 10A, illustrates the assembly.

Figure 7 is a photograph of three sensor preamplifier assemblies. When the sensor preamplifiers are incorporated into the spacecraft, they are each thermally insulated with several layers of NRC Super Insulator Foil.

2.1.6 Sensor Shorting Plug

An external removable shorting plug is supplied with the sensor preamp assembly. It protects the input stage of the preamplifier against permanent damage due to excessive voltage that may be generated by the sensor coil in the presence of high 60 Hz or other magnetic fileds. It must be removed prior to flight, otherwise, it should be removed only for flux tank testing.

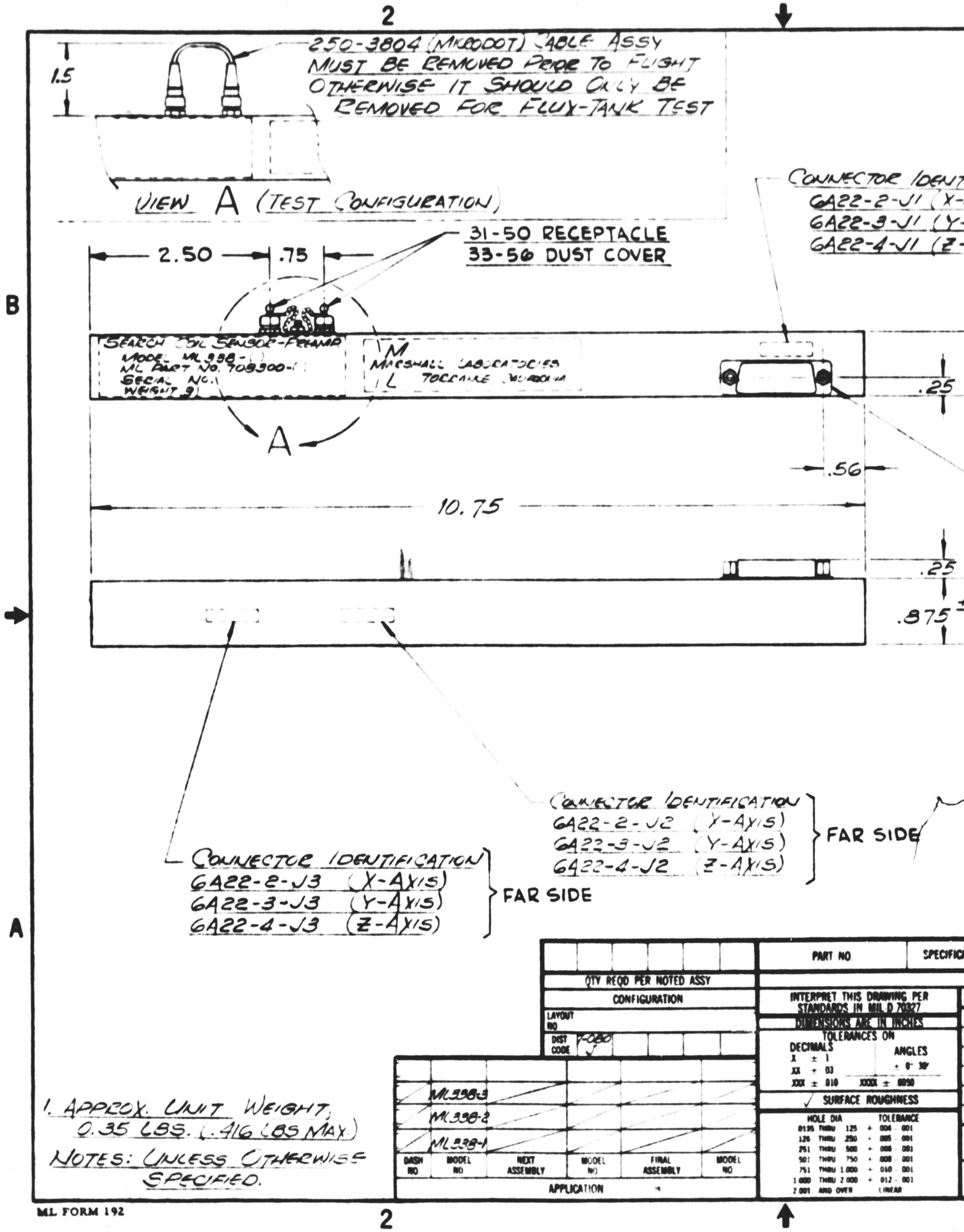

ML FORM 192

FOLDOUT FRAME 1

PARTS DISPOSITION: 1 USE 2 REWORK 3 CANNOT BE REWORKED 4 RECORD

DWG NO 708003 REV D

REVISIONS

DISP	EFF	ZONE	REV	DESCRIPTION	BY	CK	DATE	APPROVAL
4	18UP	-	A	A1 - J1 WAS ---9P--- A2 - ADDED J2 & J3 A3 - ADD .416 CBS MAY TO S/N Nº1.	RG	RK	2/10/67	RK
4	18UP	-	B	CONNECTOR J1 ROTATED 180°	RG			
4	18UP	-	C	RELOCATED J2 & J3	P.D.			
4	18UP	-	D	ADDED VIEW "A"	RG		'67	

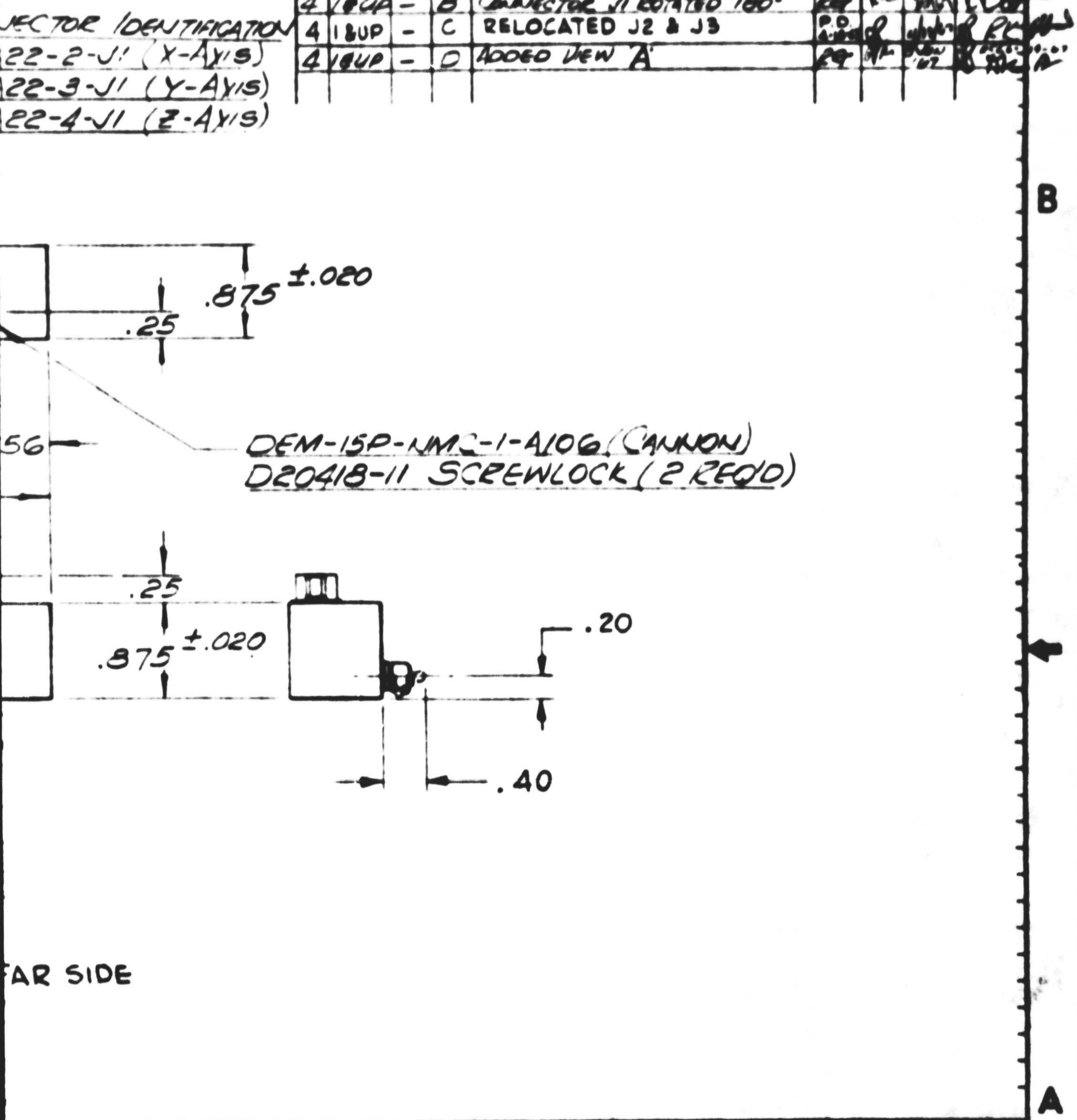

NO	SPECIFICATION	NOMENCLATURE OR DESCRIPTION	ELEC REF DES	CODE IDENT	ZONE	ITEM NO.

LIST OF MATERIALS

...T THIS DRAWING PER ...DS IN MIL D 70327
...ONS ARE IN INCHES
...LERANCES ON ANGLES ± 0° 30'
... XXXX ± .0050
...RFACE ROUGHNESS

...IA	TOLERANCE
125	+ .004 - .001
250	+ .005 - .001
500	+ .006 - .001
750	+ .008 - .001
1.000	+ .010 - .001
2.000	+ .012 - .001
OVER	LINEAR

CONTRACT NO 7-080

DRAWN R. Golden DATE 1 Nov 66

CHECK

MECH ENG

ELECT ENG 11/1/66

PROJ ENG 8 Nov 66

APPD

DESIGN ACTIVITY APPD 11/68

CUSTOMER

M L — MARSHALL LABORATORIES, TORRANCE, CALIFORNIA

TITLE MECHANICAL CONFIGURATION-SENSOR-PREAMPLIFIER, TRIAXIAL SEARCH COIL MAGN. (OGO-F-22)

SIZE	CODE IDENT NO	DWG NO	REV
C	13126	708003	D

SCALE 1/1 RELEASED NOV 9 1966 SHEET 1 OF 1

1

FOLDOUT FRAME 2

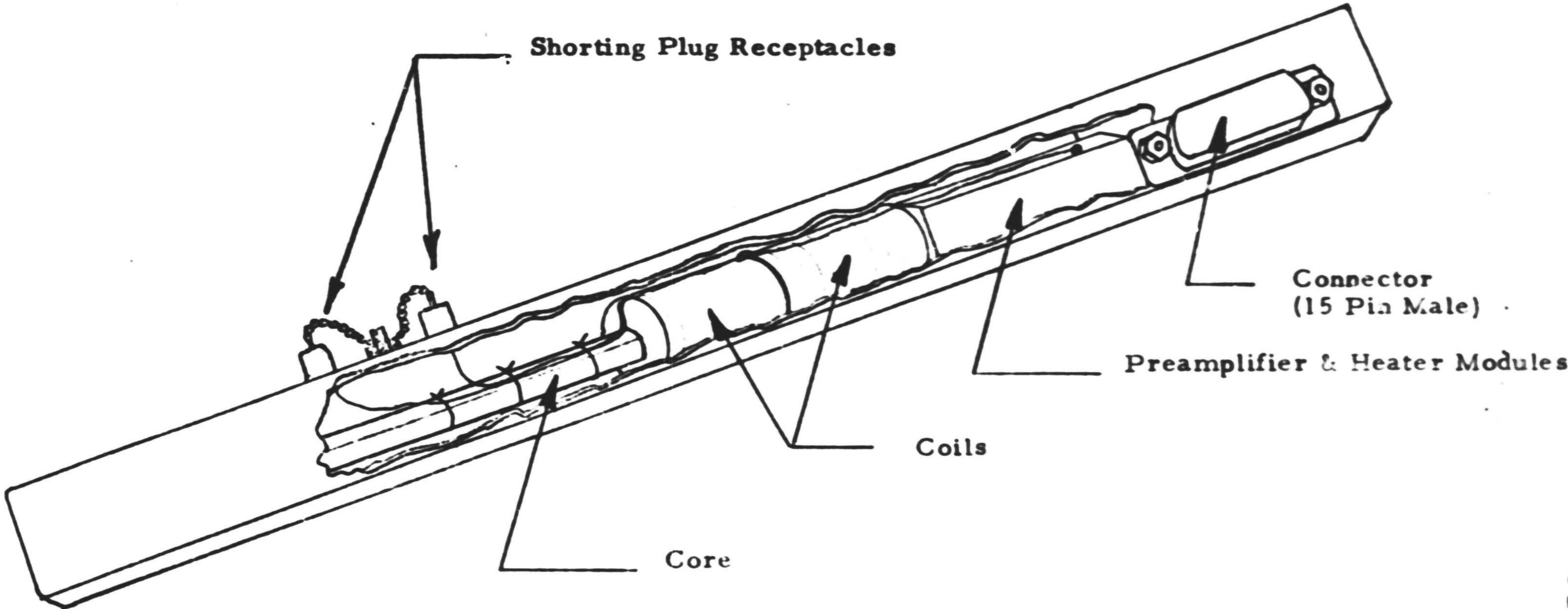

Figure 6A Sensor and Preamplifier Assembly

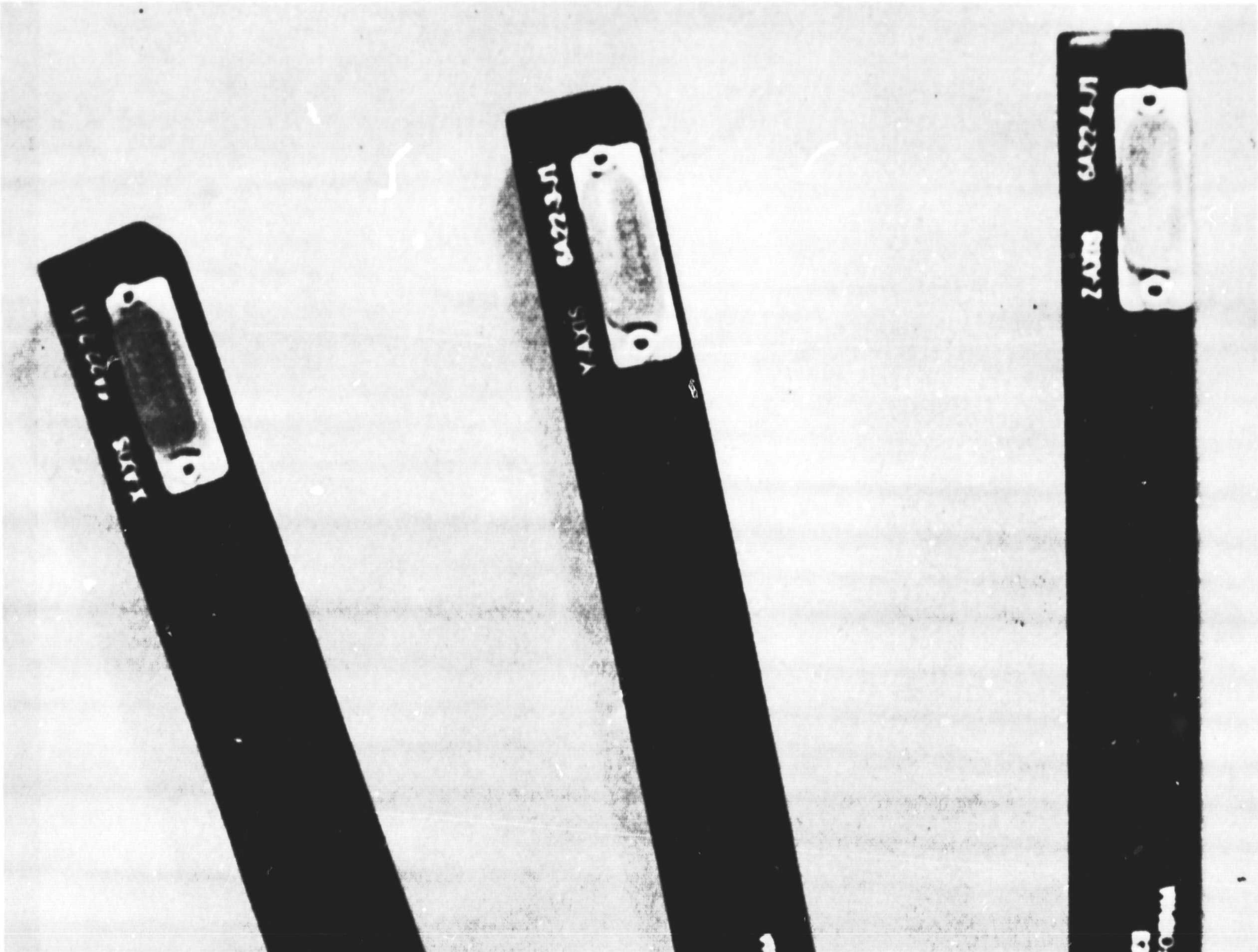

FIGURE 7. OGO-F SEARCH COIL MAGNETOMETER SENSOR-PREAMP ASSEMBLIES

2.2 Main Electronic Assembly

2.2.1 Waveform Channel

A block diagram of the waveform channel is shown in figure 8. The waveform channel receives its input signal from the sensor preamplifier.

The signal is passed through a 400 Hz notch filter for attenuation of the fundamental spacecraft power frequency. The notch filter has unity gain at all other frequencies. The output of the 400 Hz filter is sent to the input of the spectrum channel, and in the waveform channel, to the first variable low pass filter. The signal is fed through the first high pass coupling to a gain change amplifier and then to the second variable low pass filter.

The variable low pass filters determine the upper frequency response or bandwidth of the waveform channel. The filters are controlled by the logic to yield an upper frequency response of 4, 8, 16, 32, or 64 Hz. The actual bandwidth is a function of the spacecrafts bit rate, switch, and mode signals and the waveform channel's mode which is either dual or single.

The gain change amplifier has a gain of either 2 or 20, controlled by ground command. The signal then passes through a second high pass coupling into a fixed gain amplifier whose gain is 10. The input and output of the fixed gain amplifier, related to each other by an amplitude factor of 10, are sent to the waveform mode switch.

At the waveform mode switch, one of these two signals is selected and delivered unchanged as the waveform mode switch output. The output of the fixed gain amplifier is also fed through a third high pass coupling to an output amplifier whose gain is 5. This amplifier's output is the Waveform A output signal, an output to the spacecraft. The output of the waveform mode switch in an identical manner is fed through a high pass coupling to another output amplifier becoming the Waveform B output signal, an output to the spacecraft.

Waveform A and B will be identical or differ in amplitude by a factor of 10, depending upon the state of the waveform mode switch. The waveform mode switch is controlled by the Mode Change Command, a ground command signal. When Waveform B is the same as Waveform A, the instrument is in single mode, when Waveform A is 10 times larger than Waveform B, the instrument is in dual mode. The X, Y, and Z channels are in identical bandwidth, gain and mode states at any given time.

28

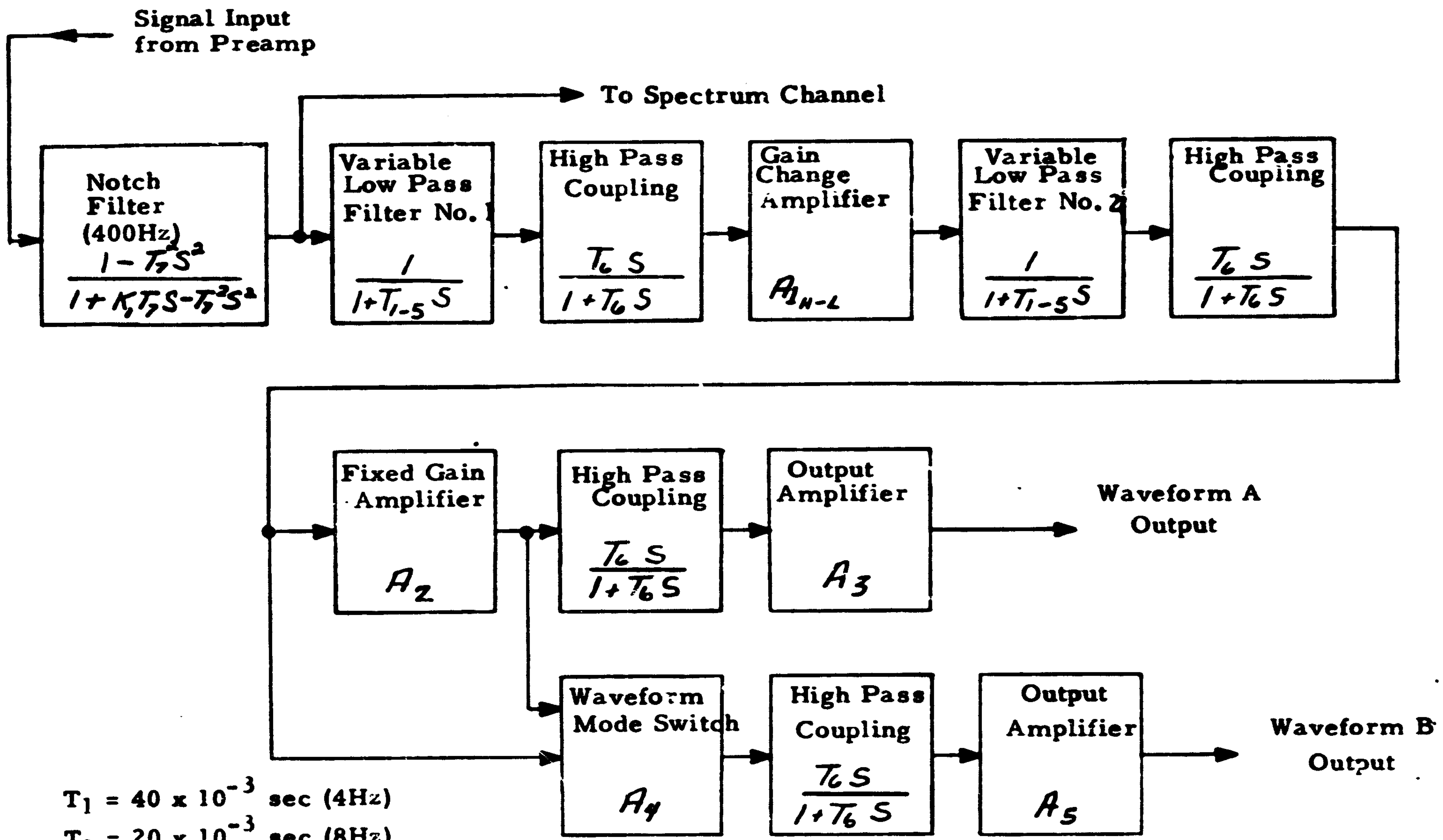

$T_1 = 40 \times 10^{-3}$ sec (4Hz)
$T_2 = 20 \times 10^{-3}$ sec (8Hz)
$T_3 = 10 \times 10^{-3}$ sec (16Hz)
$T_4 = 5.0 \times 10^{-3}$ sec (32Hz)
$T_5 = 2.5 \times 10^{-3}$ sec (64Hz)
$T_6 = 40$ sec
$T_7 = 0.398 \times 10^{-3}$ sec (400 Hz)

$A_{1H} = 20$ (High)
$A_{1L} = 2$ (Low)
$A_2 = 10$
$A_3 = A_5 = 5$
$A_4 = 1$
$K_1 = 0.188$

Figure 8
Waveform Channel Block Diagram

The characteristics of the waveform channel are as follows:

2.2.1.1 Waveform A Channel

A. The high mid-frequency gain is 1,000 ± 20.

B. The low mid-frequency gain is 100 ± 2. In the dual mode "A" channel is always in high gain in single mode A channel can be in either gain state. The high or low gain state is determined by ground command.

C. The high frequency response at either gain setting is determined by the two low pass filters. The two in cascade yield -6db corner frequencies (-3db for an individual filter) of one of the following: 4, 8, 16, 32, or 64 Hz ± 20%. Beyond the corner frequencies, the filters in cascade yield attenuation of 12db per octave (6db per individual filter).

D. The low frequency response is determined by the three high pass coupling circuits. Each coupling circuit has a corner frequency of 0.004 Hz ± 20% with an attenuation of 6db per octave. This yields an overall response of -3db at 0.01 Hz ± 20% with an attenuation of 18 db per octave beyond the corner frequency.

E. Output - Resting level: 2.5 ± 0.1 VDC

Dynamic range undistorted: 0 to +5 VDC

Maximum: -1.0 to +6.5 VDC

Dynamic output impedance: less than 500 ohms

F. Notch Filter attenuation: 20db minimum at 400 Hz.

2.2.1.2 Waveform B Channel

Gain is the same as Waveform A channel when in single mode. In dual mode, Waveform B is lower than Waveform A, by a factor of 10 ± 0.2. In other respects the characteristics of Waveform B channel are the same as Waveform A channel.

2.2.2 Spectrum Channel

A block diagram of the spectrum channel is shown in figure 9. The spectrum channel has two major sections in cascade; a wideband amplifier section, which delivers an output to the SCO channel, and a filter-detector and commutator section.

The wideband amplifier section receives its input signal from the 400 Hz notch filter in the waveform channel. The signal is fed through a 1850 Hz low pass filter, a high pass coupling, and a gain change amplifier, whose gain is either 2 or 20. The spectrum gain-mode condition can be high, low, or commutate between high and low at a 16 second rate. The spectrum gain-mode is determined by the spectrum gain command and the mode change command, both are ground command signals.

From the gain change amplifier, the signal is fed through a second high pass coupling to a fixed gain amplifier, whose gain is 10. The output of the fixed gain amplifier (the output of the wideband section of the spectrum channel) is fed to the SCO channel and to the filter-detector and commutator section.

The filter-detector section contains seven bandpass filter amplifiers, each having a gain of 4, and whose center frequencies are 10, 20, 47, 100, 216, 550, and 1 KHz. Each bandpass filter drives its own peak detector. Each peak detector's output voltage is sampled in sequence by the spectrum commutator circuit. Each sample period is one seventh of the total cycle time. Immediately after it is sampled, a peak detectors output will be dumped to zero volts allowing 6 sample periods for it to reach a new peak value. The total cycle time is dependent upon the spacecraft index pulse frequency.

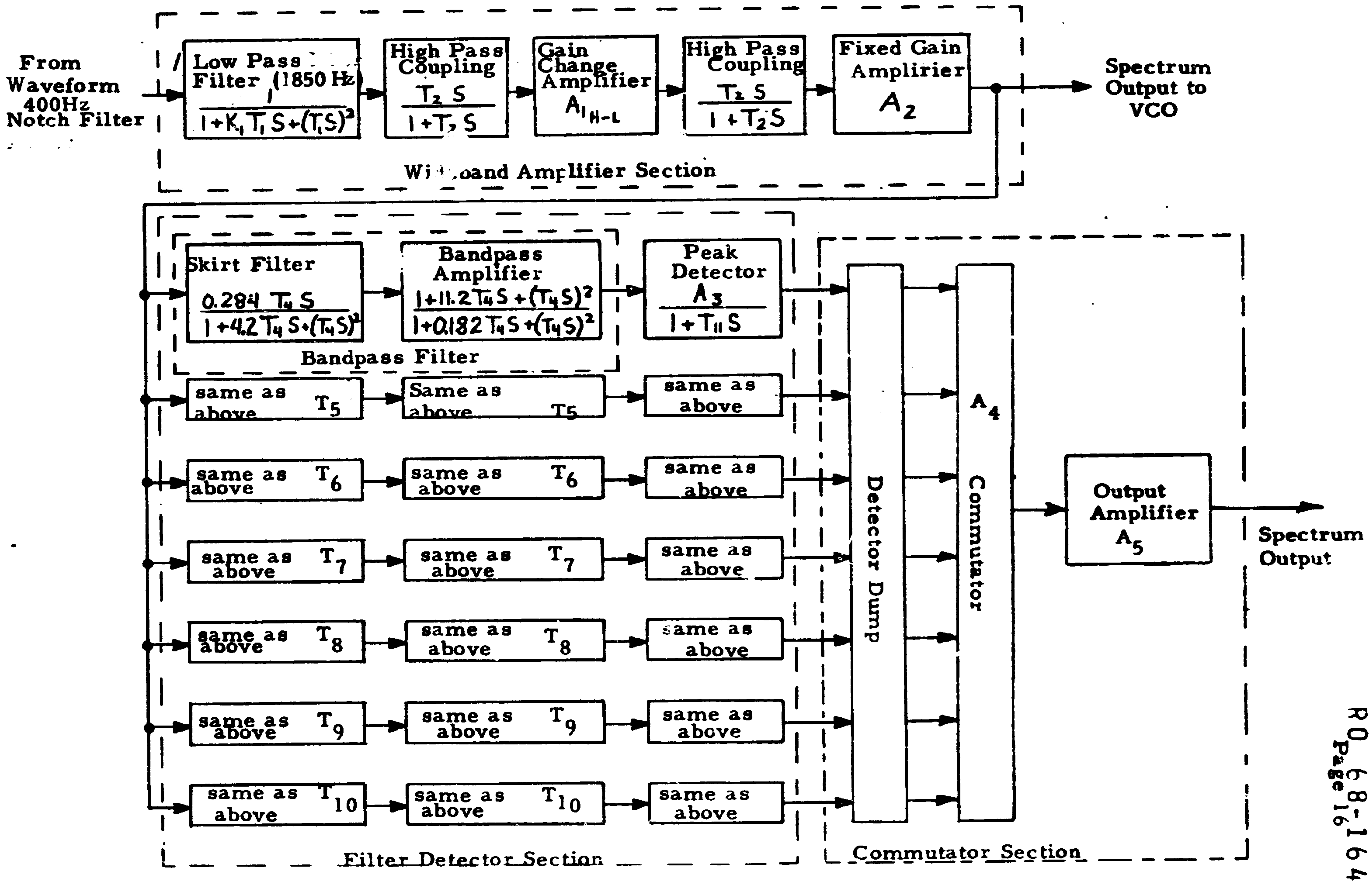

Figure 9A
Spectrum Channel Block Diagram

$A1_H$ = 20 High

$A1_l$ = 2 Low

A2 = 10

A3 = $\frac{\text{1.4 volts DC}}{\text{volts RMS}}$

K1 = 1.0

T_1 = 86.3×10^{-6} sec

T_2 = 220×10^{-3} sec

T_3 = 2.2 sec

T_4 = 1.6×10^{-3} sec (fo = 10 Hz)

T_5 = 7.2×10^{-3} sec (fo = 22 Hz)

T_6 = 3.4×10^{-3} sec (fo = 47 Hz)

T_7 = 1.6×10^{-3} sec (fo = 100 Hz)

T_8 = 0.74×10^{-3} sec (fo = 216 Hz)

T_9 = 0.29×10^{-3} sec (fo = 550 Hz)

T_{10} = 0.16×10^{-3} sec (fo = 1 KHz)

T_{11} = 10 sec

A_4 = 1

A_5 = 2

Figure 9B
Spectrum Channel Block Diagram

The spectrum channel has the following characteristics:

2.2.2.1 Wideband Section

A. The mid-frequency gain is 200 ± 2%, (high gain) or 20 ± 2% (low gain) as directed by ground command. In the commutating mode, the gain is changed every 8 seconds.

B. The high frequency response including the preamplifier section of the sensor-preamplifier is flat to within ± 0.5db to 1,000 Hz. The attenuation is 18db/octave for frequencies higher than 1.85 KHz.

C. The low frequency response is determined by the two high pass coupling circuits. Each coupling circuit has a -3db corner frequency of 0.72 Hz ± 20% with an attenuation of 6db per octave. This yields overall a -3db corner frequency of 1.0 Hz ± 20% and an attenuation of 12db per octave for lower frequencies.

D. See Appendix A for a plot and raw computer data of the Main Body Electronics, Wideband Test Point Theoretical Frequency Response.

E. Output

Resting level: +2.5 ± 0.1 volts
Dynamic swing 0 to +5 volts
Dynamic output impedance: less than 200 ohms

2.2.2.2 Filter-Detector Section

A. The gain at resonance of each bandpass filter (skirt filter plus bandpass amplifier) is 4.0 ± 10%.

B. The resonant frequencies of the seven bandpass filters are 10, 22, 47, 100, 216, 550, and 1,000 Hz all ± 10%.

C. The gain of each filter relative to the resonant frequency gain is as follows:

Frequency	Relative Gain in. db
fo x 1.0	0
fo x 1.1, x 0.91	-3 ± 0.5
fo x 1.18, x 0.848	-6 ± 1.0
fo x 1.5, x 0.667	-13.4 ± 1.0
fo x 2.15, x 0.465	-20 ± 1.0

D. The detector output with zero signal at its input is 0 ± 20 millivolts. The temperature stability is better than ± 20 millivolts.

E. The detector rise time constant is less than 3 milliseconds.

F. The detector output level is nominally 0 to + 2.5 VDC.

G. The detector outputs are reset to zero volts after being sampled.

H. Fall time constant is 10 seconds nominal, 5 seconds minimum.

I. Detector gain: 1.41 VDC output for each 1.00 V rms input.

2.2.2.3 Commutator Section

The commutator section of the spectrum channel consists of a seven channel commutator and an output amplifier.

A. Commutator gain = 1.0

B. The commutator sequentially samples the output of each peak detector.

C. A detector dump circuit (a part of the logic) sequentially discharges each peak detector after being sampled by the commutator.

D. Output Amplifier
Gain: 2.0 ± .04
Resting level: 0 ± 20 MV dc
Dynamic swing: 0 to + 5 VDC
Dynamic output impedance: less than 200 ohms

2.2.2.4 Spectrum Channel Overall

The gain frequency response and stability of the spectrum channel are the combined characteristics of the wideband, filter-detector and commutator section.

Nominal gain at one of the bandpass center frequencies:

High: 800
Low: 80

2.2.3 SCO Channel

A block diagram of the SCO Channel is shown in figure 10. The SCO receives its signal input from the output of the fixed gain amplifier in the wideband section of the spectrum channel. The frequency components present in this signal can be from below 1 Hz to above 1 KHz. The signal is fed through a low pass filter (designed to sharply reject signals above 1 KHz) and high pass coupling to the voltage controlled oscillator. The VCO is FM modulated about its center frequency value by the instantaneous value of the signal voltage. The resultant FM signal if fed into a bandpass filter for harmonic rejection. The FM signal is then sent to a summing output amplifier where it is combined with the FM signals from the other two axes. The output of this amplifier is the SCO output to the spacecraft.

The SCO channel has the following characteristics:

A. The input to each VCO is filtered by a two section low pass filter which is down 6db ± 20% at 1000 Hz. The gain of the filter is 0.34 ± 5%.

B. Center frequencies of the SCO's.
X: 40.0KHz ± 0.2%
Y: 52.5KHz ± 0.2%
Z: 70.0KHz ± 0.2%

C. Frequency deviation as a percent of center frequency per input volt peak to peak.
X: ± 3.00 ± 0.06 percent
Y: ± 2.00 ± 0.03 percent
Z: ± 1.50 ± 0.03 percent

D. 5.00 ± 0.15 volts peak to peak input gives full frequency modulation output for each SCO.

E. The modulation produces less than one percent distortion for the maximum available signal from the low pass filter.

F. Not more than five percent of the VCO output signal lies outside the following bands:
1. X-Axis 34.0 to 46.0 KHz
2. Y-Axis 47.25 to 57.75 KHz
3. Z-Axis 64.75 to 75.25 KHz

G. All SCO's are simultaneously ON or OFF as directed by ground command.

H. Output

Resting level: AC coupled output
Dynamic swing: 5.0 volts ± 5% peak to peak
Dynamic output impedance: less than 100 ohms

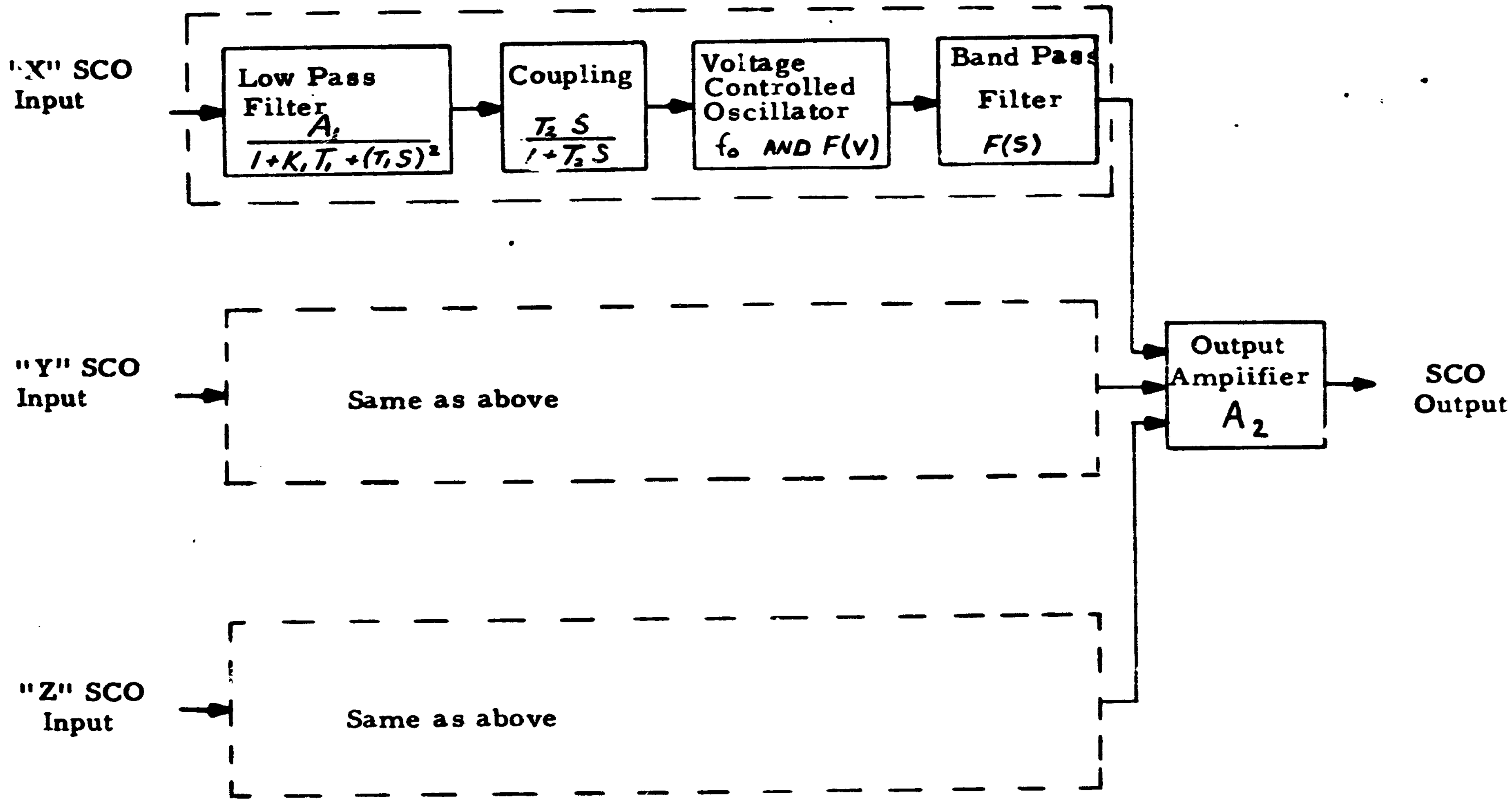

NOTE: $A1 = 0.34$
$A2 = 1$
$K1 = 2$
$T1 = 0.16 \times 10^{-3}$ sec.
$T2 = 0.71$ sec

For X: fo = 40KHz
F(v) = 0.18 fo/volt
F(s)3db = (1 ± 0.15)fo

For Y: fo = 52.5KHz
F(v) = 0.12 fo/volt
F(s) 3db = (1 ± 0.15)fo

For Z: fo = 70 KHz
F(v) = 0.09 fo/volt
F(s) 3 db = (1 ± 0.075)f

Figure '0
SCO Channel Block Diagram

2.2.4 Logic Subsystem

A block diagram of the logic subsystem is shown in figure 11. The logic subsystem contains nine major logic control circuits, these are:

1. Spectrum Channel Commutator Control
2. Real Time Decoder
3. Bit Rate Decoder
4. Eight Second Generator
5. Waveform Bandwidth Control
6. Gain and Mode Control
7. SCO Control
8. IFC Control
9. Logic Reset

A majority of the logic circuits use low power Diode Transistor Micrologic integrated circuit components.

The logic subsystem is contained in the Logic and Power Supply Blivet.

2.2.4.1 Spectrum Channel Commutator Control

A logic block diagram of this control circuit is shown in figure 12. The Spectrum Commutator Control circuit receives the spacecraft generated Index Pulse signal and delivers to each spectrum channel seven logic signals (one for each of the spectrum filters). These are used for detector dump and commutator select. The Spectrum Channel Status signal, an output to the spacecraft, is also generated by this circuit.

The Index Pulse can be of variable rate (dependent upon the telemetry rate) and thus the cycle time to sample once each of the seven filters will vary proportionally. Another output, a periodic logic signal called "2^2" is sent to the Eight Second Generator. "2^2" will vary proportionally with the Index Pulse.

For ground test purposes two test inputs can be energized. Inhibit Index Pulse inhibits the effect of the spacecraft index pulse. Enternal Index Pulse is a test generated pulse train.

Characteristics of this circuit:

A. Commutator Cycle time:

Index Pulse (Spacecraft)	Telemetry Rate	Spectrum Commutator	
		Cycle Time	One Filter Sample Period
6.94 PPS	8 KB	1.01 sec.	0.144 sec.
13.9 PPS	16 KB	0.504 sec.	0.072 sec.
55.6 PPS	64 KB	0.126 sec.	0.018 sec.

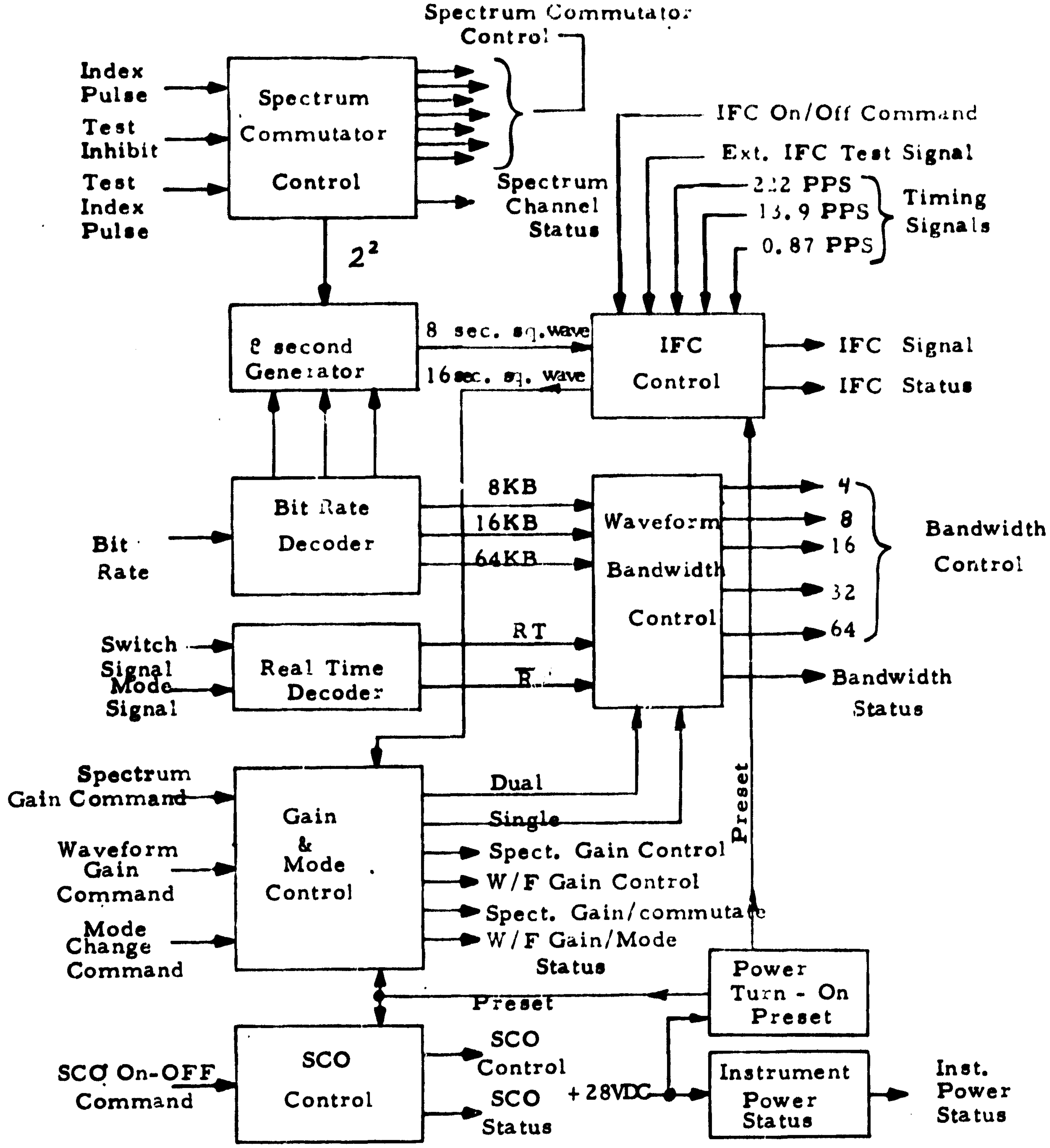

Figure 11

Logic Subsystem Block Diagram

40

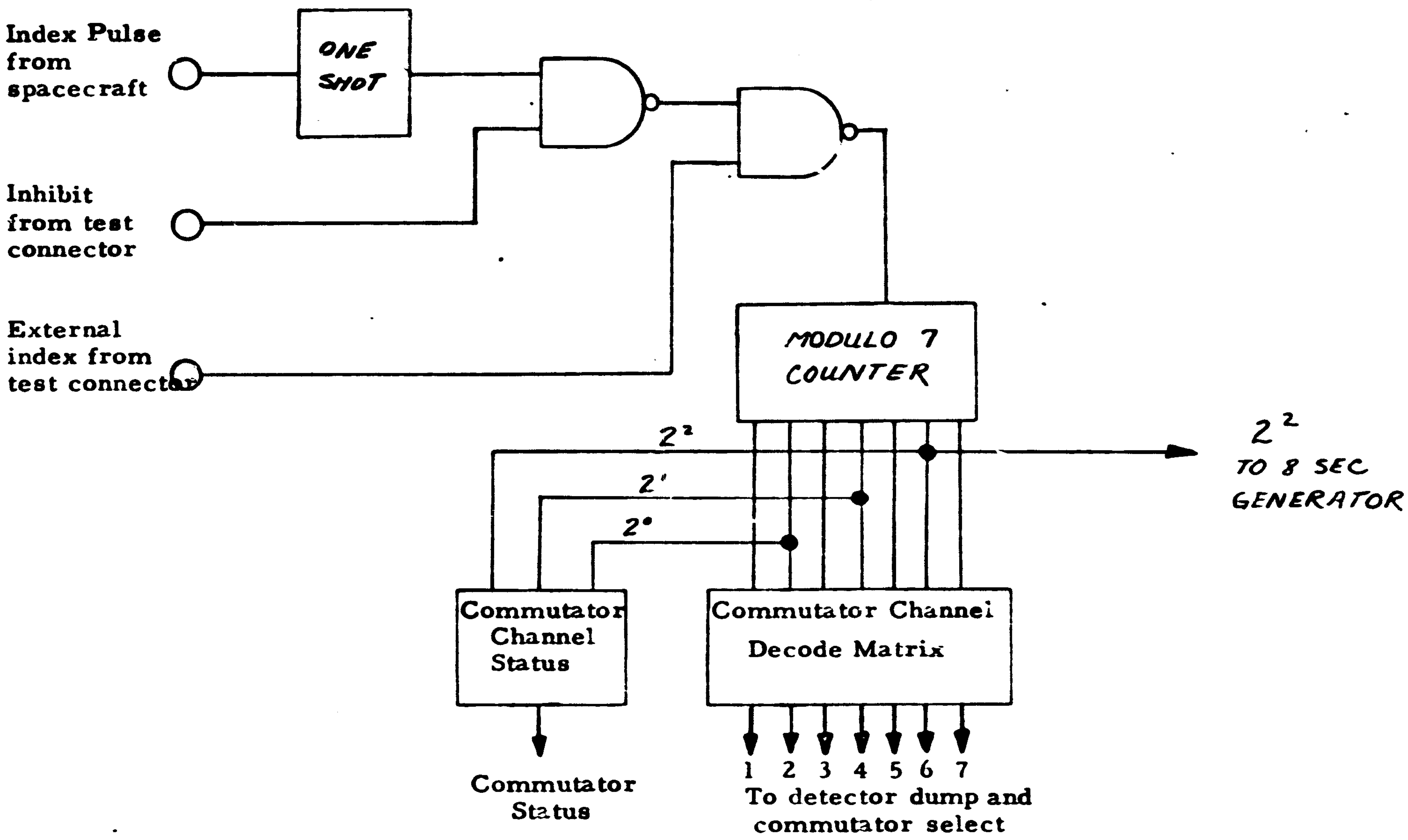

Figure 12
Spectrum Channel Commutator

B. External Index Pulse
True: 0.0 ± 0.5 VDC
False: 3.5 to 5.0 VDC
Frequency as required for testing, but for proper instrument operation, frequency must be related to the Bit Rate signal (8, 16, or 64 KB).

C. Inhibit Index Pulse
Inhibit: short to signal ground
Operate: open circuit

D. Commutator channel status output voltage levels: See section 2.2.6.

2.2.4.2 Real Time Decoder

A logic block diagram of this circuit is shown in figure 13. This circuit generates a real time logic level signal RT and its inverse $\overline{RT}$ by decoding the spacecraft inputs Switch Signal and Mode Signal. The spacecraft Mode Signal is not to be confused with the ground generated Mode Change Command. For the function of Mode Change Command, see paragraph 2.2.4.6.

The Switch Signal indicates which one of the two spacecraft telemetry groups is accepting inputs from this instrument. The Mode Signal indicates which one of the two spacecraft telemetry groups is recording and which one is transmitting.

Real time is true when, and only when, this instrument is connected to a telemetry group that is transmitting.

Characteristics of this circuit:

Inputs from spacecraft		Outputs to other Logic circuits	
Switch	Mode	RT	$\overline{RT}$
0.0 VDC	+6.75 VDC	1	0
+6.75 VDC	0.0 VDC	1	0
0.0 VDC	0.0 VDC	0	1
+ 6.75 VDC	+ 6.75 VDC	0	1

where 1 = true = +4.25 ± 0.75 VDC
and 0 = false = 0.0 to +1.0 VDC

42

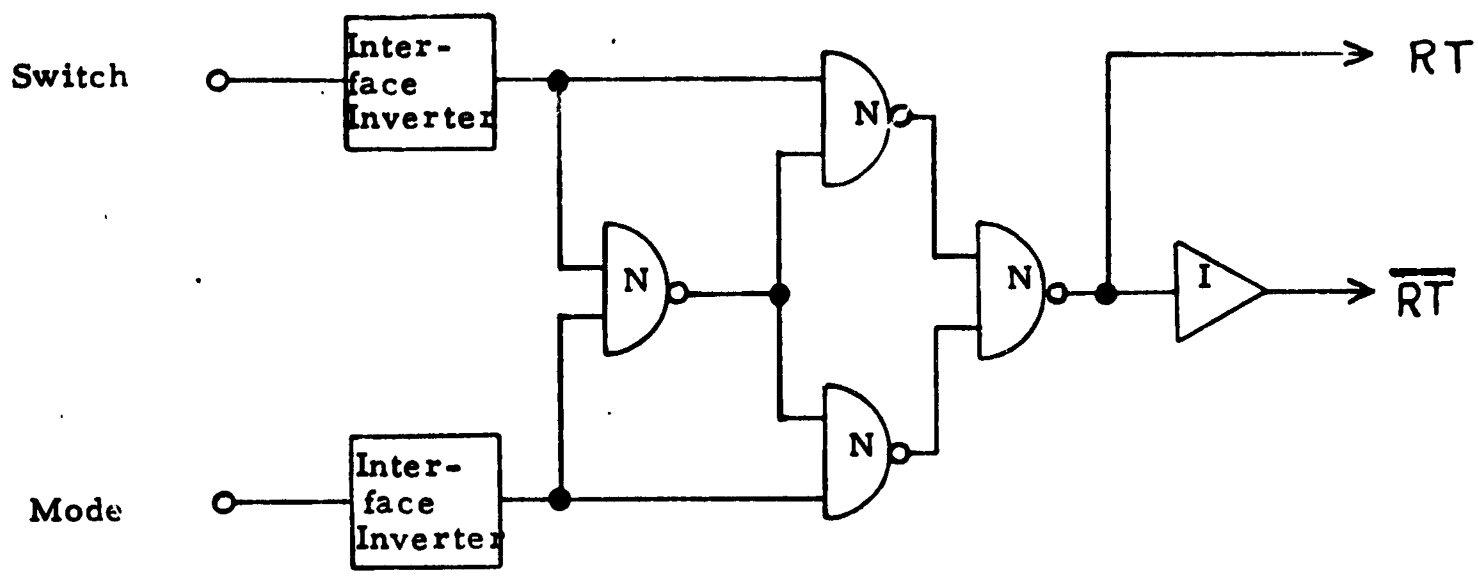

NOTE:
N = NAND
I = inverter

Figure 13
Real Time Decoder

2.2.4.3 Bit Rate Decoder

A logic block diagram of the Bit Rate Decoder is shown in figure 14. The Bit Rate Decoder converts the Bit Rate signal from the spacecraft, a tri-level signal, into three individual logic level output signals. These are 8 KB, 16 KB, and 64 KB and are indicative of the spacecraft's telemetry capability in thousands of bits per second. These output signals are sent to the Eight Second Generator and Bandwidth Control circuits.

Characteristics of this circuit:

INPUT	OUTPUT LOGIC LEVELS		
Bit Rate Signal	8 KB	16 KB	64 KB
0.0 ± 0.5 VDC	1	0	0
+3.9 ± 0.5 VDC	0	1	0
+7.25 ± 0.5 VDC	0	0	1

where "1" = + 4.25 ± 0.75 VDC
and "0" = 0.0 + 1.0 VDC

2.2.4.4 Eight Second Generator

A logic block diagram of the Eight Second Generator is shown in figure 15. The circuit generates a 8.064 seconds per cycle square wave signal that is sent to the IFC Control circuit. It is used to control the duration of the IFC test, and develops the 16 second square wave used for spectrum gain commutation generation in the Gain and Mode Control circuit.

The 8 second generator is driven by the "2^2" output of the spectrum commutator control circuit which is a function of the index pulse rate. To insure an 8 cycle per second signal, independent of the index pulse frequency, inputs from the Bit Rate Decoder circuit are used, these are 8 KB, 16 KB, and 64 KB.

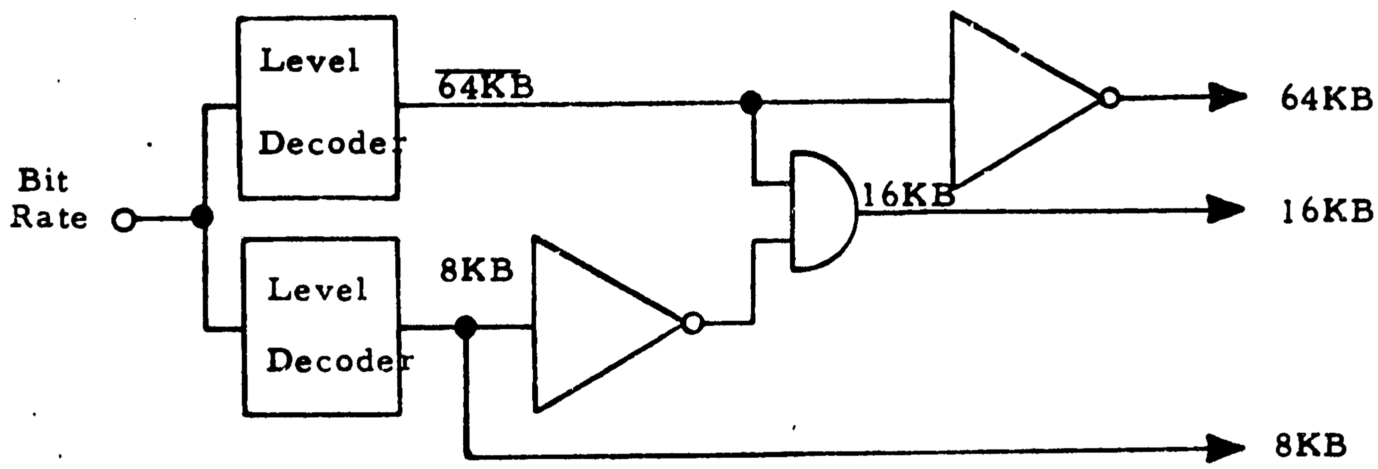

Figure 14
Bit Rate Decoder

2.2.4.5 Waveform Bandwidth Control

A logic block diagram of this circuit is shown in figure 16. The function of this circuit is to control the upper bandwidth of the waveform channel according to the information handling ability of the telemetry.

The bandwidth conditions are as follows:

Bandwidth Condition	Telemetry (spacecraft controlled) Bit Rate	Record/Transmit	Waveform Channel Mode (ground controlled)
4 Hz	any 8 KB	Record Transmit	Dual Dual
8 Hz	any 8 KB 16 KB	Record Transmit Transmit	Single Single Dual
16 Hz	16 KB	Transmit	Single
32 Hz	64 KB	Transmit	Dual
64 Hz	64 KB	Transmit	Single

Thus the logic inputs required are: 8 KB, 16 KB, and 64 KB from the Bit Rate Decoder; RT and $\overline{RT}$ from the Real Time Decoder; and Dual Mode and Single Mode waveform channel status signals from the Gain and Mode Control circuit. Four lines carry the Bandwidth Control output signals to the three waveform low pass filter buffers as follows:

Bandwidth Condition	Output Control Lines to the buffer 4BW	8BW	16BW	32BW
4 Hz	0	0	0	1
8 Hz	0	0	1	0
16 Hz	0	1	0	0
32 Hz	1	0	0	0
64 Hz	0	0	0	0

where 1 = +3.5 ± 0 5 VDC
and 0 = - 6.0 ± 0.3 VDC

A Bandwidth Status Output signal is also generated and sent to the spacecraft. For voltage levels see paragraph 2.2.6.

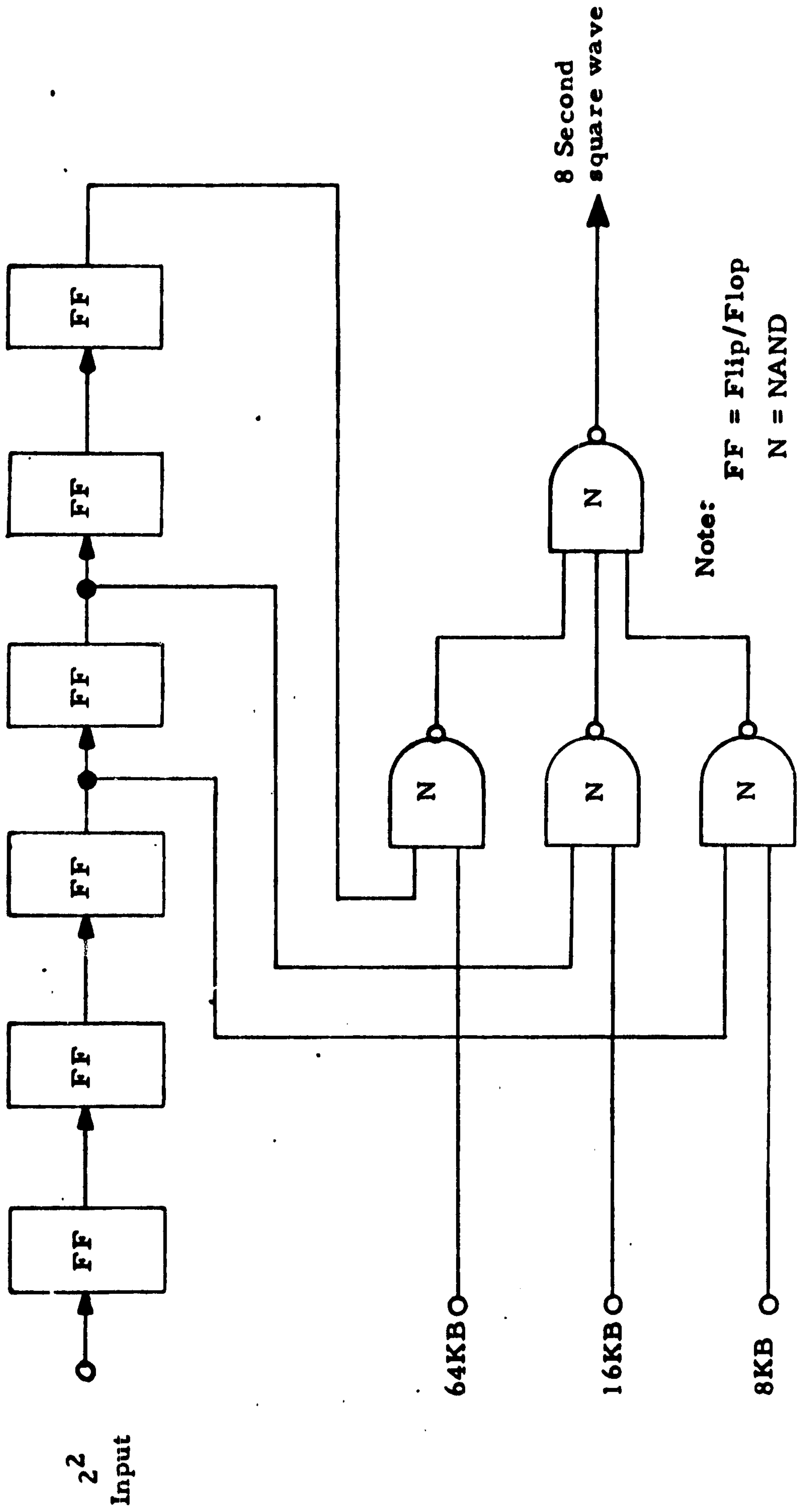

Figure 15
8 Second Generator

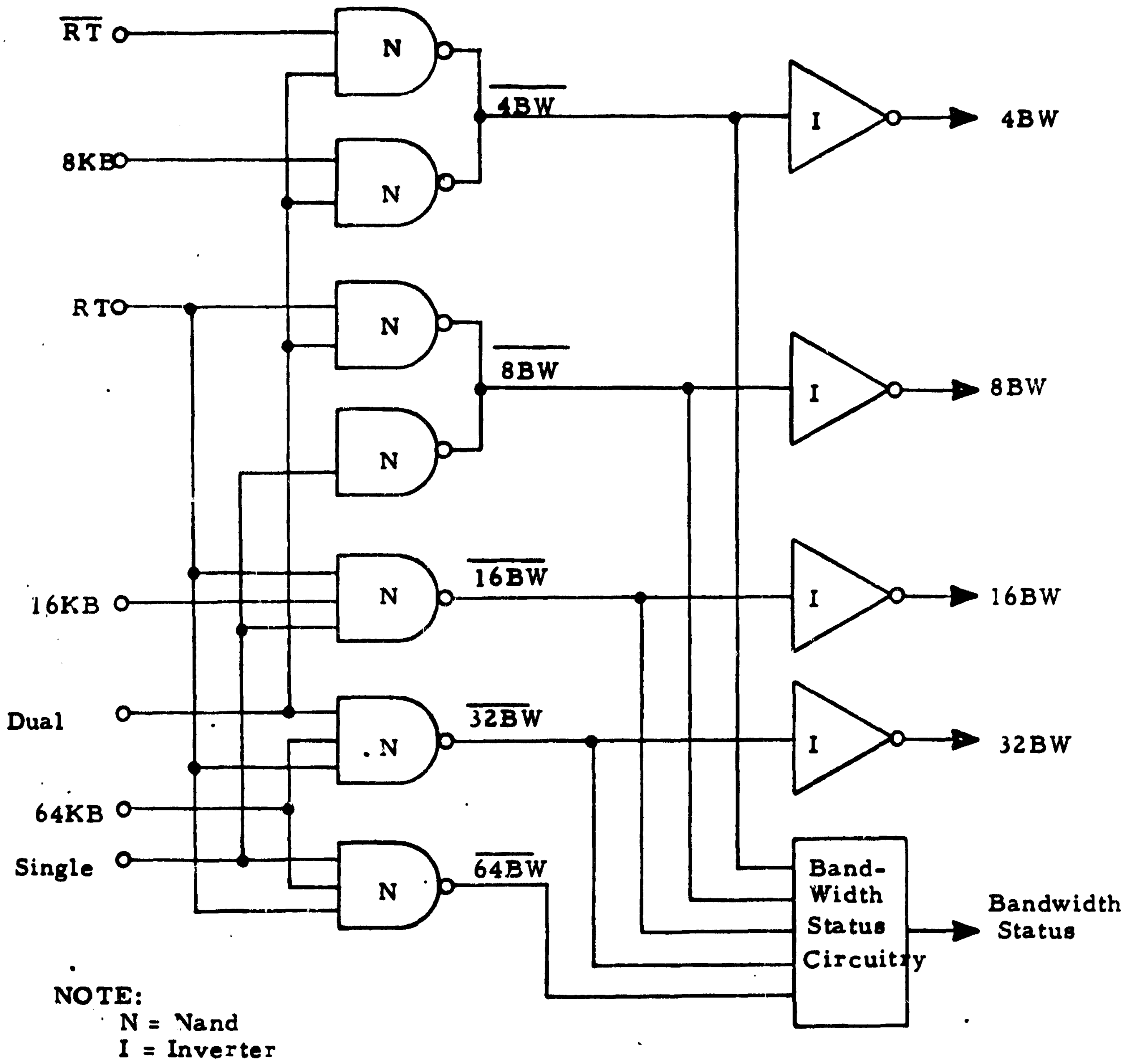

Figure 16
Waveform Bandwidth Control

2.2.4.6 Gain and Mode Control

A logic block diagram of this circuit is shown in figure 17. The function of this circuit is to control the gain and mode (commutation) of the wideband section of the spectrum channel and the gain and mode (single/dual) of the waveform channel.

The inputs received by this circuit are Spectrum Gain Command, Waveform Gain Command, Mode Change Command, (all ground command signals), and a 16 second square wave signal from the IFC control circuit for spectrum commutation timing. Mode change command is not to be confused with mode signal, see paragraph 2.2.4.2 for the mode signal function.

The logic control output voltages generated by this circuit are Spectrum Gain Control which is sent to the gain change amplifier in the spectrum channel, Waveform Gain Control which is sent to the gain change amplifier in the waveform channel, a waveform Dual Mode control signal sent to the bandwidth control circuit, and a Waveform Single Mode control signal sent to the waveform mode switch in the waveform channel.
Two multi-level status signals are generated and sent to the spacecraft, these are Spectrum Gain and Commutate Status and Waveform Gain and Mode Status for voltage levels of these signals, see paragraph 2.2.6.

2.2.4.6.1 Spectrum Control

The spectrum channel may operate in one of the following conditions:

A. Low gain, noncommutate

B. Low gain, commutate

C. High gain, noncommutate

D. High gain, commutate

In the commutate mode, the spectrum gain continuously alternates in gain thus: high, low, high, low, etc. each high state is maintained for 8 seconds and each low state is maintained for 8 seconds.

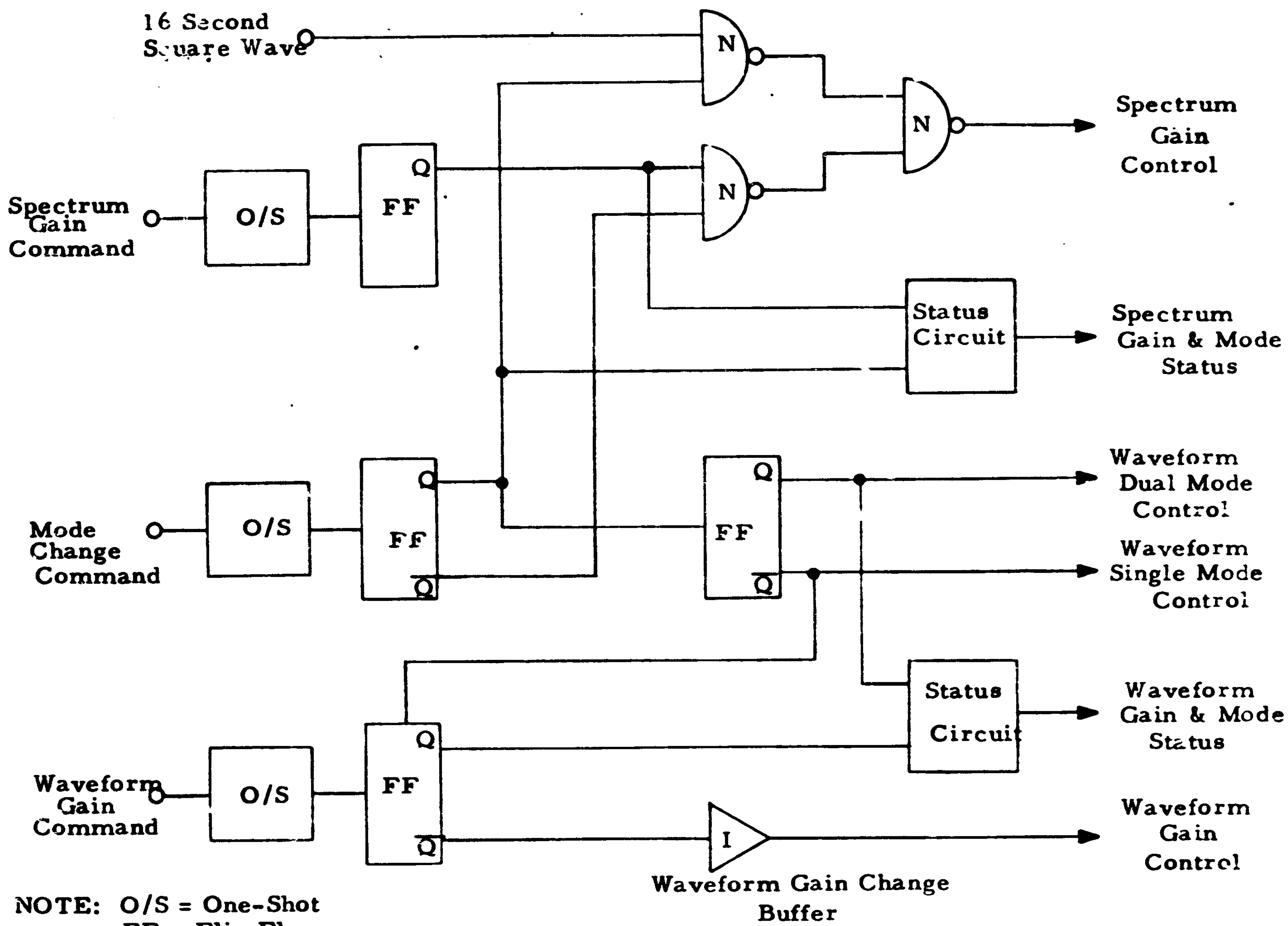

NOTE: O/S = One-Shot
FF = Flip Flop
N = Nand
I = Inverter

Figure 17
Gain & Mode Control

2.2.4.6.1.1 Each Spectrum Gain Command inpulse signal will change the quiescent Spectrum Channel Gain in the following sequence: high, low, high, low, etc. The quiescent gain is defined as the gain when the channel is in the noncommutate mode.

2.2.4.6.1.2 Each mode change command signal impulse will change (independent of the actual quiescent gain) the mode of the spectrum channel in the following sequence: commutate, noncommutate, commutate, noncommutate, etc. When going from commutate to noncommutate, the spectrum channel always returns to the quiescent gain state (high or low), that it was in just prior to going into commutate.

2.2.4.6.2 Waveform Control

The waveform channel operates in one of the following conditions:

A. Low gain, single mode (A output = B output)

B. High gain, single mode (A output = B output)

C. High gain, dual mode (A output = 10 X B output)

2.2.4.6.2.1 Each second Mode Change Command impulse signal will change, independent of the actual gain, the mode of the waveform channel. For each impulse sent, the following mode sequence occurs: single mode, single mode, dual mode, dual mode, single mode, single mode, dual mode, dual mode, etc. In the dual mode condition, the gain is forced into the high gain state and remains there until changed by the Waveform mode followed by a Gain Change Command. This series of impulse commands will place the instrument into single mode high gain followed by single mode low gain.

2.2.4.6.2.2 Each Waveform Gain Change command impulse signal will change, in the single mode state, the waveform channel gain in the following sequence: high, low, high, low, etc. In the dual mode state the Waveform Gain Change command signal is inhibited.

2.2.4.7 SCO Control

A logic block diagram of the SCO Control Circuit is shown in figure 18.

This circuit receives the SCO On - Off Command impulse signal, a ground generated command, and sends a D.C. logic level On - Off control signal to the three VCO's. All VCO's are in the same state (all off, or all on) at any one time. Each impulse command changes the SCO state thus: on, off, on, off, etc. This circuit also generates an SCO On - Off Status output signal, for voltage levels see paragraph 2.2.6.

2.2.4.8 IFC Control

A logic block diagram of the IFC Control circuit is shown in figure 19.

The IFC (In-Flight Check) circuit generates a 128 second long test signal sufficiently rich in harmonic content to cover the operational frequency range of the instrument (0.01 to 1,000 Hz).

The IFC output signal is sent to the IFC input of the preamplifier. The IFC output signal is turned on by a signal impulse of the IFC On - Off command signal, a ground generated command. After generating its 128 seconds test signal, the IFC turns itself off and remains off until the next impulse turns it on. The 128 second test signal does not start until the following edge of the 16 second square wave (generated in the IFC circuit by dividing the 8 second square wave input from the 8 second generator by 2). Thus there is a zero to 16 second delay from the time of receipt of the impulse ground command until actual start of the IFC signal. The sending of an impulse command at any time that the IFC signal is on will immediately return the IFC signal to the off state.

The IFC output signal is shown in figure 20. The first 64 second portion has low amplitude signal voltages, the second 64 second portion has high amplitude signal voltages (larger by a factory of 10).

The input signals to the IFC control circuit are the 8 second square wave; the IFC On-Off control; the spacecraft generated 222, 13.89, and 0.868 timing signals, and an external test IFC signal. The external test IFC signal is used in ground testing

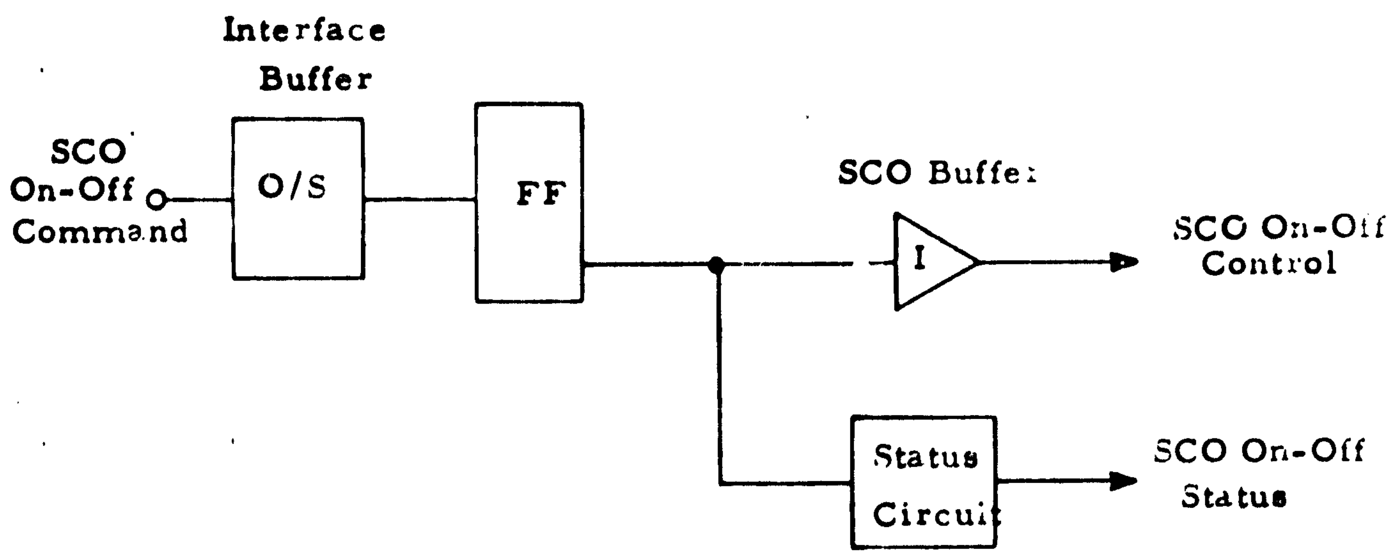

NOTE:
O/S = One-Shot
FF = Flip Flop
I = Inverter

Figure 18

SCO Control

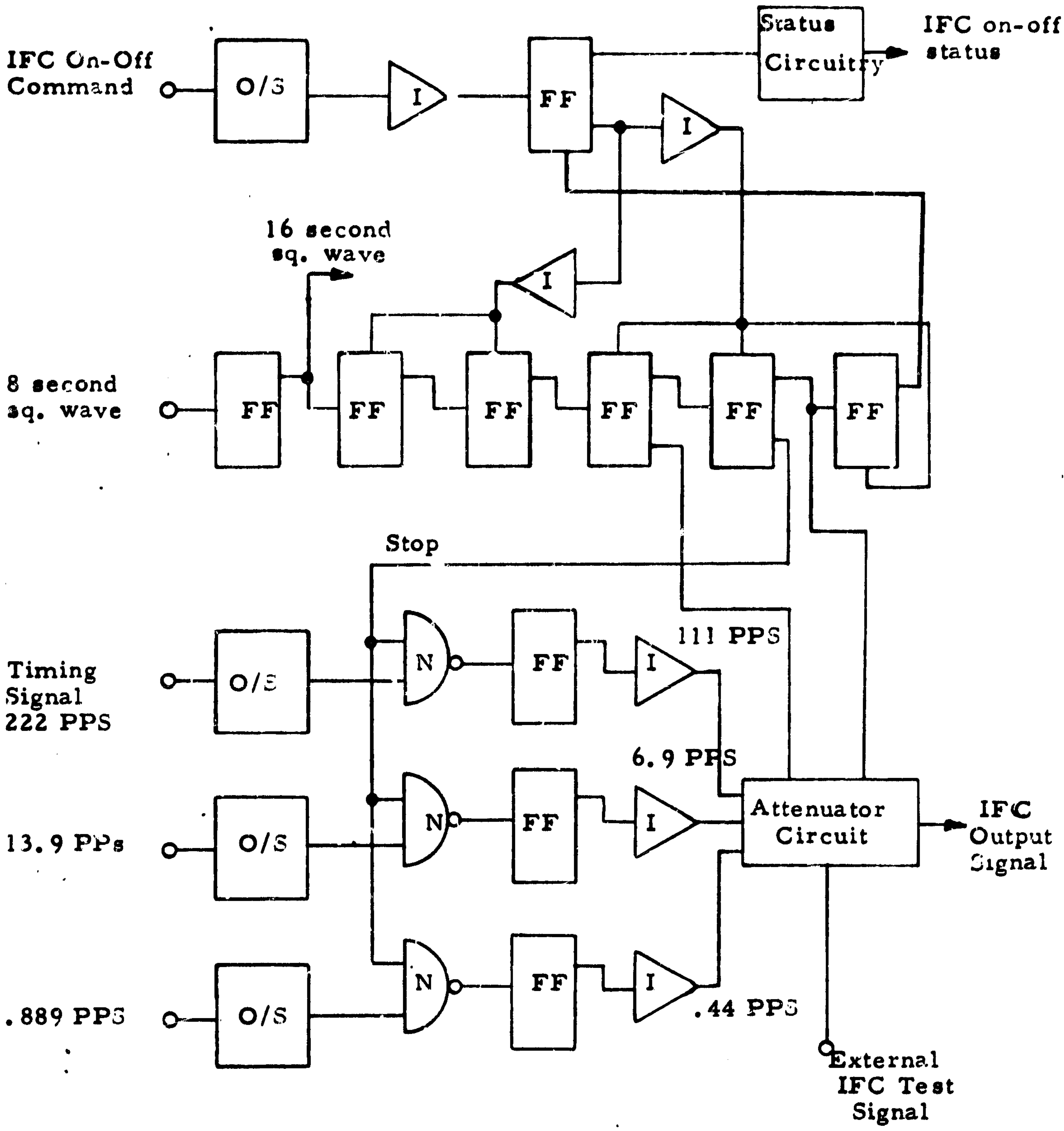

Note: O/S = one-shot FF = flip-flop
I = inverter N = NAND

Figure 19
IFC Control

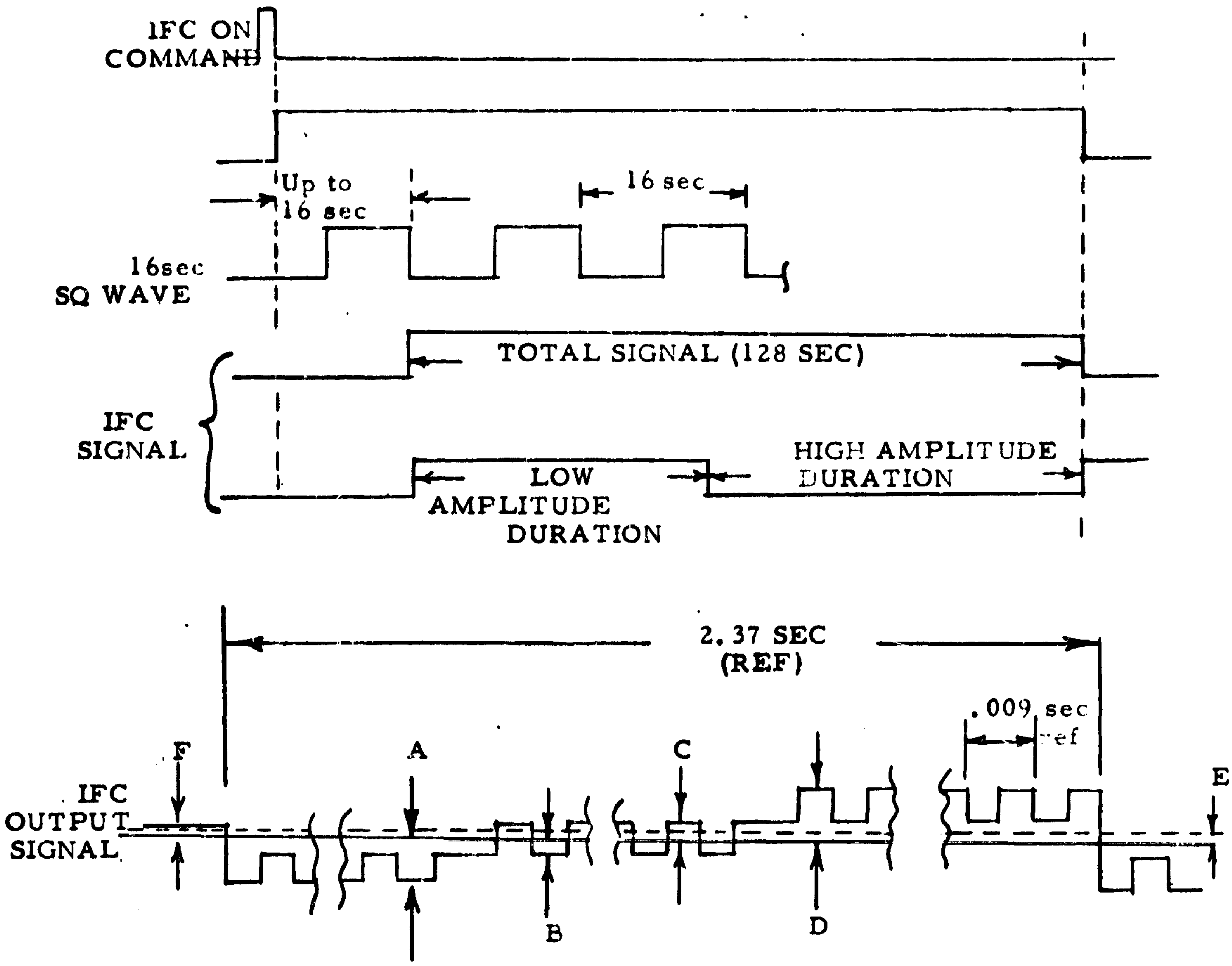

IFC OUTPUT SIGNAL AMPLITUDE VALUES IN MILLIVOLTS						
	A	B	C	D	E = DC Component of AC Signal	F = OFF DC Level
Low Amplitude Signal	-1.48	-0.42	+0.63	+1.67	0.0 ± 0.1	+0.35 Max
	±0.20					
High Amplitude Signal	-16.3	-5.25	+5.25	+16.6	0.0 ± 0.1	
	+2.0					

FIGURE 20A
IFC OUTPUT SIGNAL

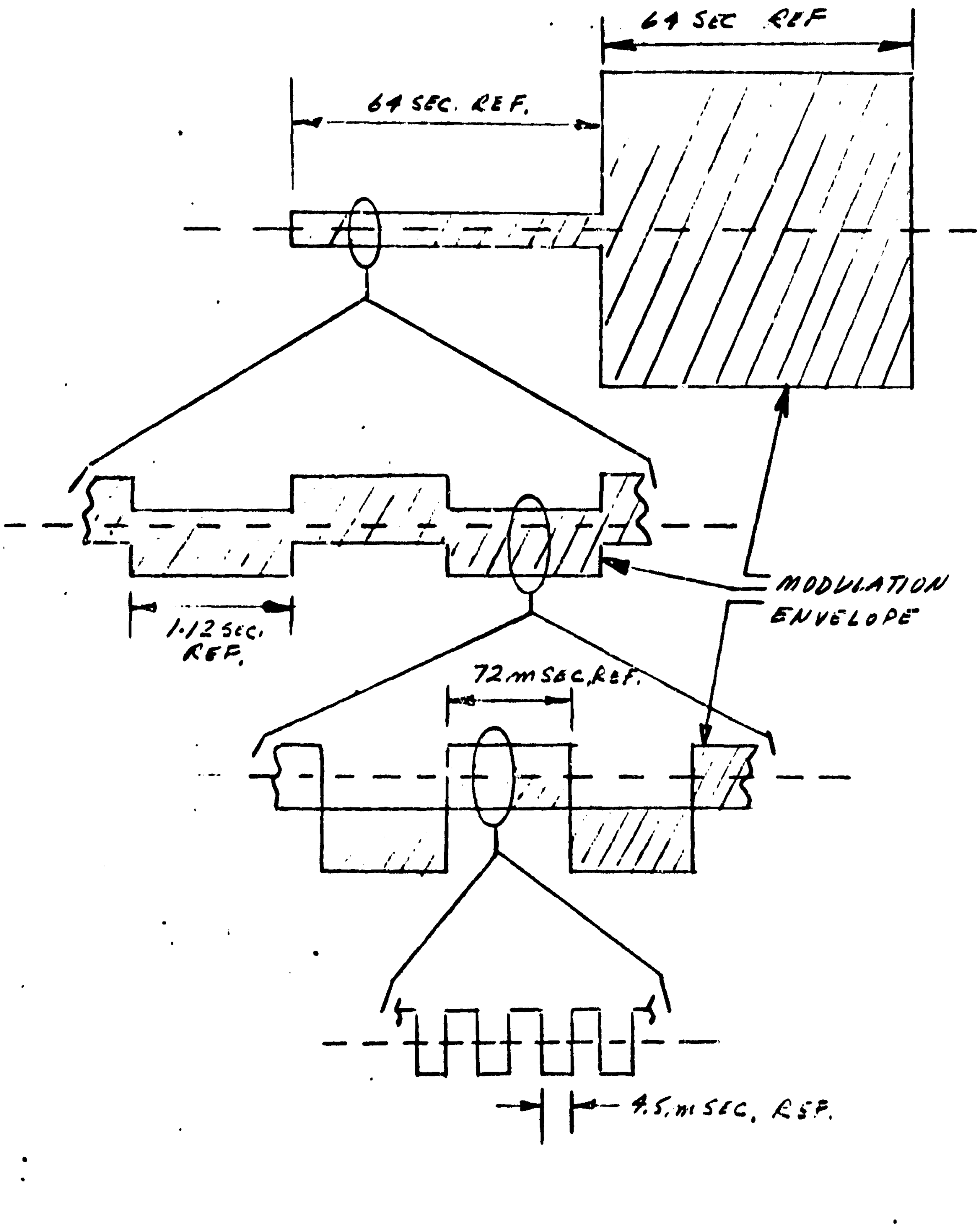

Figure 20B
IFC Output Signal

the instrument. An analog signal of any frequency may be injected at this input. The input impedance is 634 Ω.

This circuit generates an IFC status signal which is a spacecraft output. This signal shows the IFC on at the time the impulse turn on command is received. It indicates the zero to 16 second delay as IFC on time.

2.2.4.9 Logic Preset Conditions at Power Turn-On

When the instrument is first turned on, the Power Turn On Preset circuit sets initial conditions as follows:

A. Waveform Mode: Dual

B. Waveform Gain: High

C. Spectrum Gain: High

D. Spectrum Mode: Commutate

E. SCO: On

F. IFC: Off

2.2.5 Power Supply Subsystem

A block diagram of the Power Supply is shown in figure 21. The power supply provides the necessary D.C. voltages to enable all circuits to meet their specified performance.

The power supply meets interface requirements including generated noise, surge current limiting, frequency synchronization and ground isolation. Maximum input power of instrument, including sensors, is 2.5 watts (90 ma) with a nominal 28 volt input at room temperature.

The power supply subsystem contains a preregulator, a noise filter, a synchronized DC/AC converter, capable of free running at 2,461 Hz ± 5%, a sync amplifier, rectifier filters, RFI filters, and post regulators. The preregulator and post regulator are of the series pass transistor type.

The power supply delivers the following output voltages:

+ 20 VDC ± 0.1% (Sensor)

+ 20 VDC ± 0.1% (Main body electronics)

- 20 VDC ± 0.1%

- 6 VDC ± 0.1%

+ 5 VDC ± 3%

+ 6 VDC ± 0.1%

The preregulator output voltage, converter transformer primary voltage, and most DC output voltages are available as test points on the instrument test connector.

The power supply is housed in an isolated cavity with its inputs brought through a separate nine pin connector.

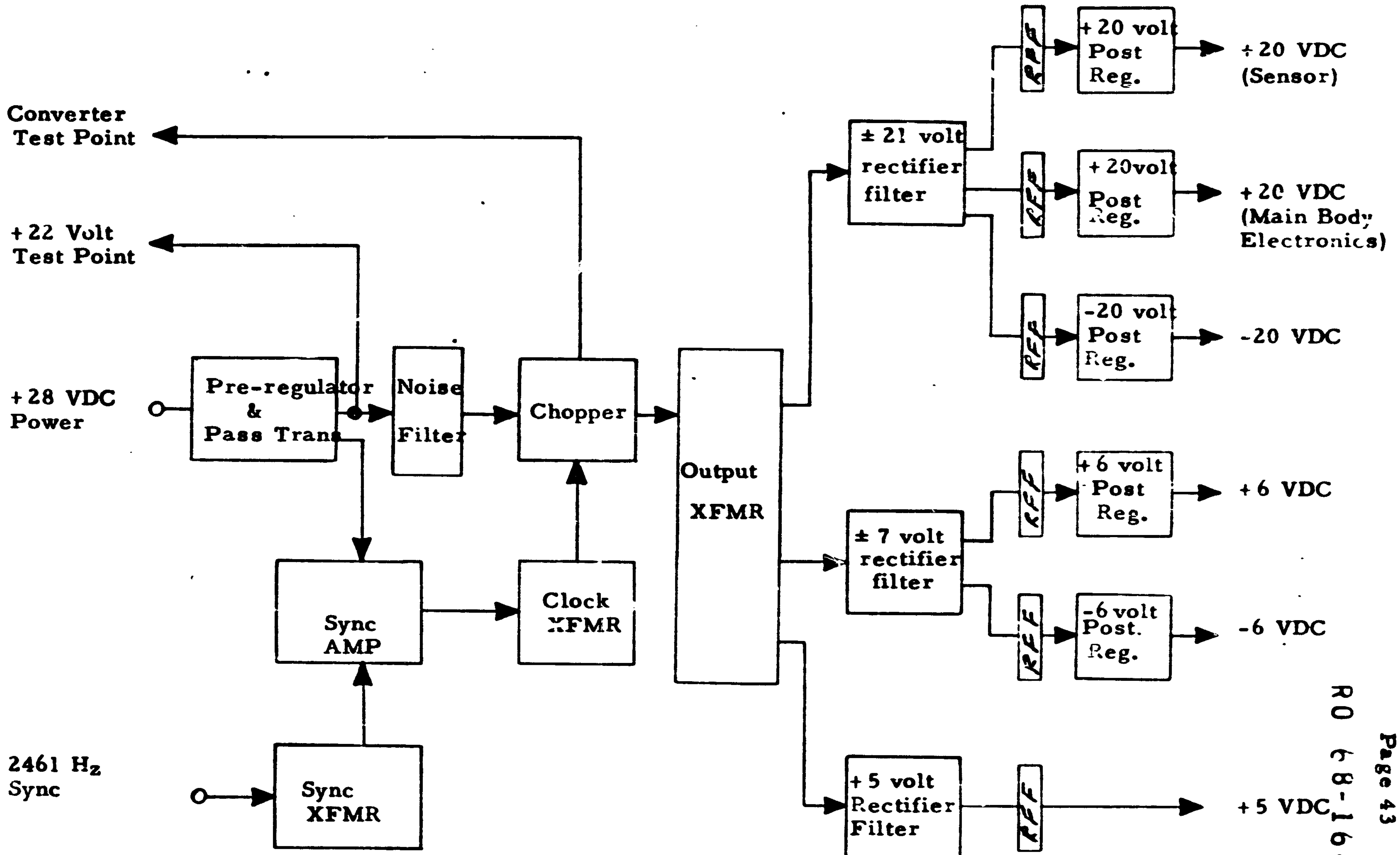

NOTE: RFF = Radio Frequency Filters

Figure 21
Power Supply

2.2.6 Status Outputs

The status output signals to the spacecraft are each single wire lines. All outputs are DC levels. All have dynamic output impedances of less than 1,000 ohms.

2.2.6.1 Spectrum Channel Status

Output Voltage (± 0.15V)	Condition
+ 0.5	10 Hz
+ 1.0	22 Hz
+ 1.5	47 Hz
+ 2.0	100 Hz
+ 2.5	216 Hz
+ 3.0	550 Hz
+ 3.5	1000 Hz

2.2.6.2 Spectrum Gain and Mode Status

Output Voltage (± 0.2V)	Condition
+ 0.1	Low Gain/noncommutate
+ 1.0	Low Gain/commutate
+ 2.0	High/Gain/noncommutate
+ 3.0	High/Gain commutate

2.2.6.3 Waveform Gain and Mode Status

Output Voltage (± 0.2V)	Condition
+ 0.1	Low Gain/Single Mode
+ 1.0	High Gain/Single Mode
+ 3.0	High Gain/Dual Mode

2.2.6.4 Waveform Bandwidth Status

Output Voltage (± 0.2V)	Condition
+ 0.8	4 Hz
+ 1.6	8 Hz
+ 2.4	16 Hz
+ 3.2	32 Hz
+ 4.0	64 Hz

2.2.6.5 SCO On - Off Status

Output Voltage (± 0.3 V)	Condition
+ 0.1	Off
+ 2.0	On

2.2.6.6 IFC On - Off Status

Output Voltage (± 0.3 V)	Condition
+ 0.1	Off
+ 2.0	On

2.2.6.7 Instrument Power On - Off Status (derived from +6 VDC)

Output Voltage (± 0.3 V)	Condition
+ 0.1	Off
+ 2.0	On

2.2.7 Test Connector

A test connector is provided for monitoring instrument performance when the instrument is mounted in the spacecraft. The signals available on this connector include the following:

A. All signals and status outputs to the spacecraft

B. All signals to the sensor-preamplifiers

C. The X, Y, and Z spectrum channel wideband amplifier test point outputs.

D. Power supply regulator, converter and DC output voltages.

The test connector is shown on the Wiring Interface Diagram No. 708000, see figure 3.

2.2.8 Mechanical Characteristics

The main assembly envelope conforms to the mechanical configuration drawing shown in figure 22. A photo of the main assembly showing the three electronic blivets together with the connector harness housing to which these blivets are attached, is shown in figure 23. All mechanical structure is machined from AZ31B magnesium tooling plate to provide a high strength to weight ratio. All magnesium surfaces are either treated with Dow 7 or are gold plated. The gold plating is utilized where required for electrical bonding and RFI purposes. These surfaces include the mounting base and all mating surfaces between

61

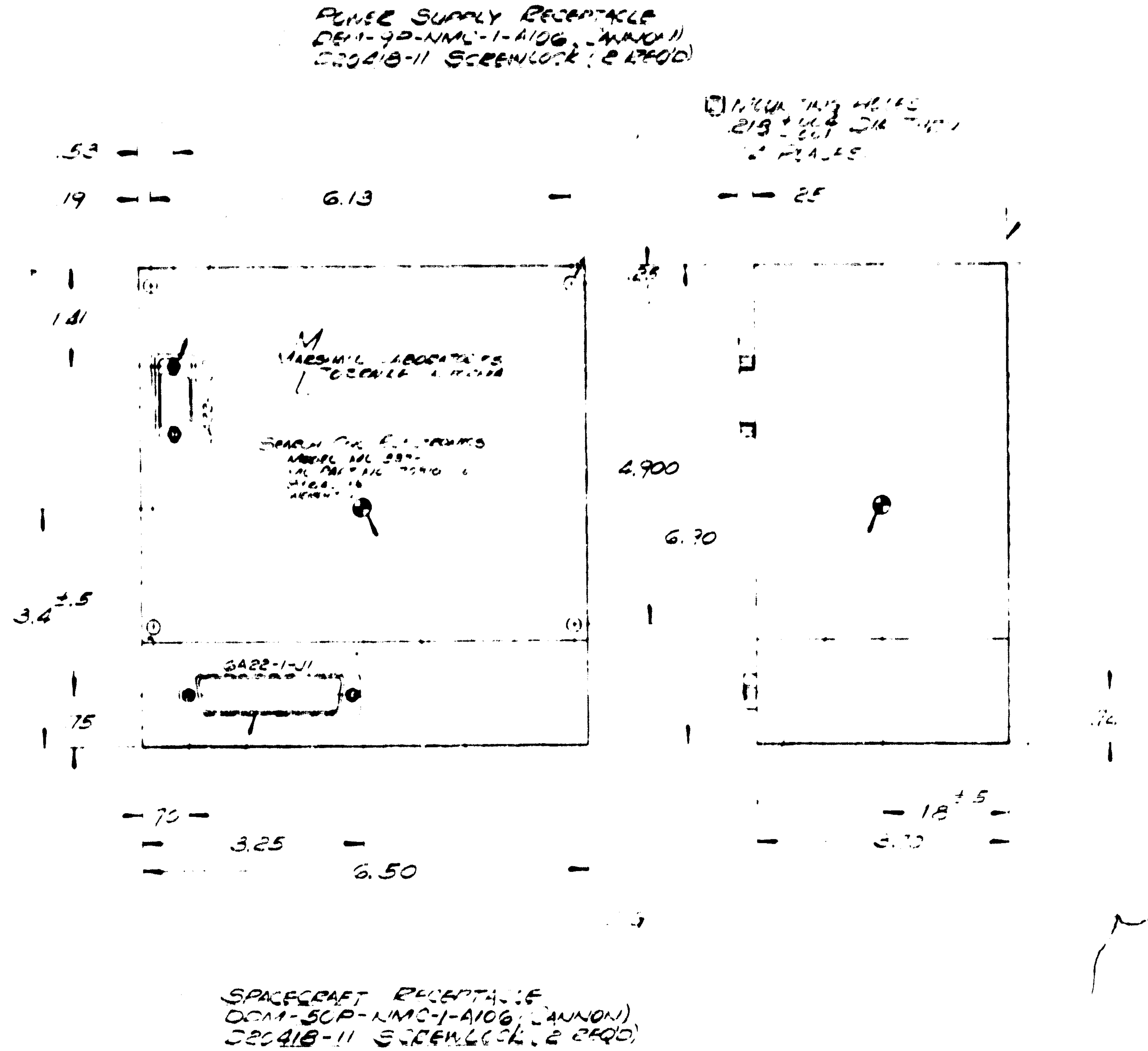

2. MOUNTING HOLES PER TRW SYSTEMS SPEC
Nº C-13356-1, REV D.
1. APPROX UNIT WEIGHT, 4.5 LBS (5.0 LBS MAX).

NOTES: UNLESS OTHERWISE SPECIFIED

FOLDOUT FRAME 1

708002 A

SPACECRAFT
MOUNTING SURFACE

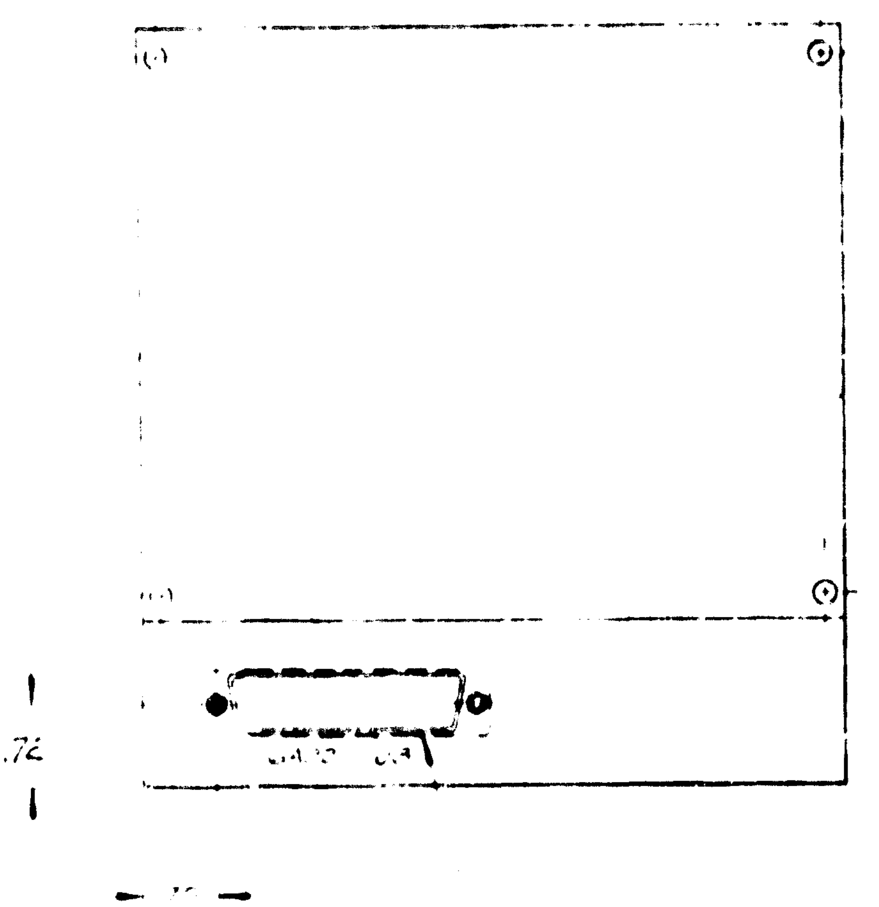

TEST RECEPTACLE
DCM-50S-NMC-1-A106 (CANNON)
D20418-11 SCREWLOCK (8 REQD)

PART NO	SPECIFICATION	NOMENCLATURE OR DESCRIPTION	ZONE	ITEM NO.

LIST OF MATERIALS

CONTRACT NO.	JPL Nº 951690
DRAWN	Golden
CHECK	
MFGR ENG	
ELEC ENG	
ENGR	
DESIGN ACTIVITY APPD	
CUSTOMER	

INTERPRET THIS DRAWING PER STANDARDS IN MIL-D-70327
DIMENSIONS ARE IN INCHES
TOLERANCES
DECIMALS .X ± .1 .XX ± .03 .XXX ± .010
ANGLES ± 0° 30'
SURFACE ROUGHNESS

MARSHALL LABORATORIES
TORRANCE, CALIFORNIA

TITLE MECHANICAL CONFIGURATION MAIN BODY ELECTRONICS, TRIAXIAL SEARCH COIL MAGN. (OSO-F-22)

SIZE	CODE IDENT NO.	DWG NO.	REV
D	13126	708002	A

SCALE 1/1 SHEET 1 OF 1

APPLICATION: NEXT ASSEMBLY / FINAL ASSEMBLY / MODEL NO.

the blivets and covers. The major portion of electrical components are packaged into welded cordwood modules using non-magnetic Alloy 180 as the interconnecting material. The fabricated modules after electrical tests, are coated with PT4121 which is a low viscosity epoxy and, then, is foamed with a light weight foam material. The modules are interconnected on a modified welded matrix again using Alloy 180 as the interconnecting material. Terminals are mounted on each matrix assembly to interconnect all input and output leads with the connector on the blivet housing.

In order to facilitate checkout of the magnetometer instrument, figures 24 through 36A are included in this report. Figures 24, 25 and 26 (Pages 49, 50, 51) are photographs of the three main blivets. Figures 27, 28 and 29 (Pages 52, 53, 54) are of the Waveform Schematic, hook-up, and assembly, respectively. Figures 30, 31, and 32 (Pages 55, 56, 57) are of the Spectrum Analyzer schematic, hook-up, and assembly, respectively. Figures 33, 34, 35, and 36 are of the Power Supply and Logic Blivet. Figure 34 (Page 58) is the schematic. Figures 35 and 36 (Page 59 and 60) are the hook-up drawings. Figure 37 (Page 61) is the assembly drawing. Figure 36A (Page 61A) is the schematic diagram of interblivet wiring scheme.

In order to determine the temperature inside the Main Electronics Assembly during tests, a temperature sensitive thermistor - resistor network is mounted in the waveform blivet. This network is used in conjunction with the BRE Monitor Unit.

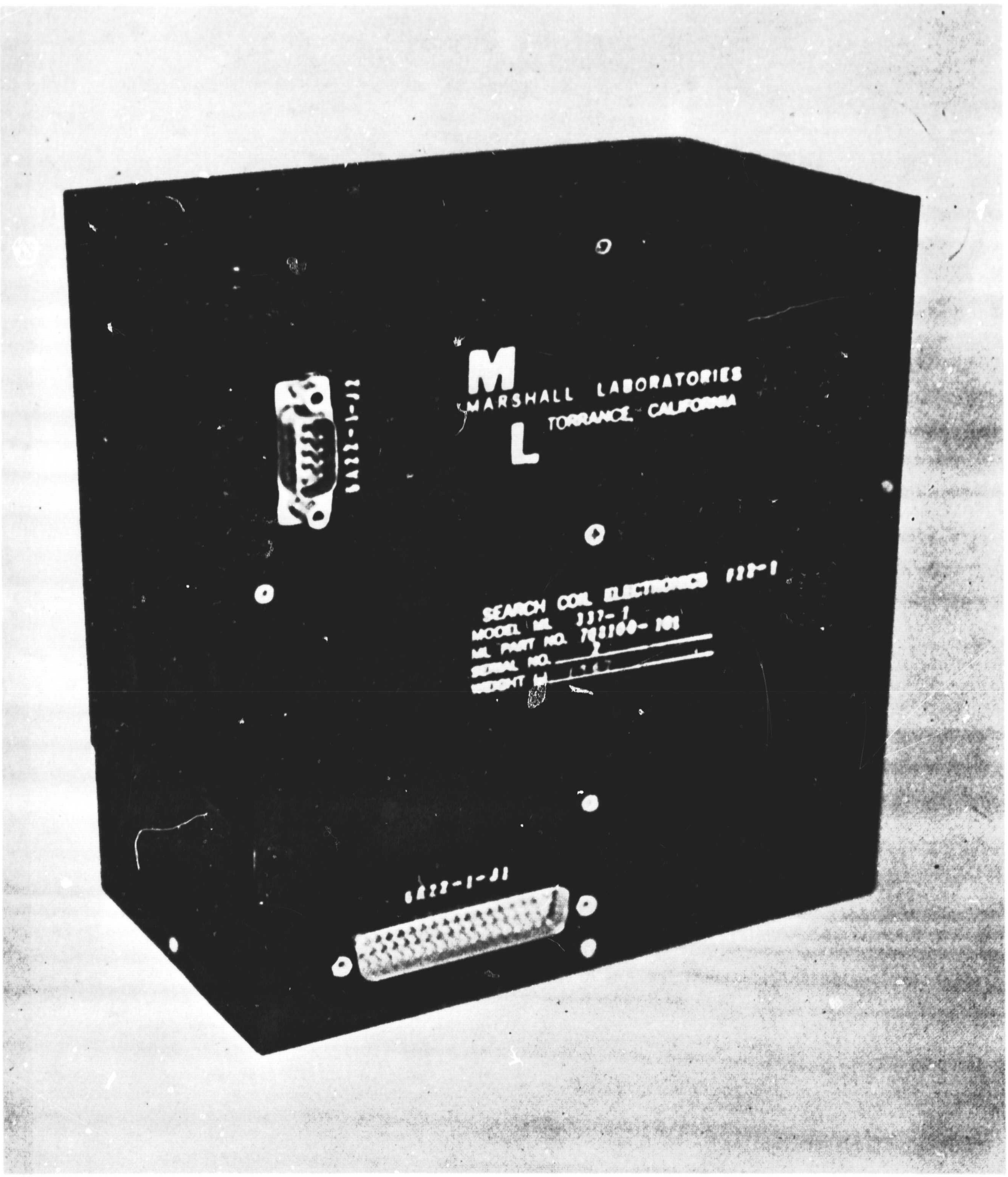

FIGURE 23. OGO-F SEARCH COIL MAGNETOMETER MAIN ELECTRONICS ASSEMBLY

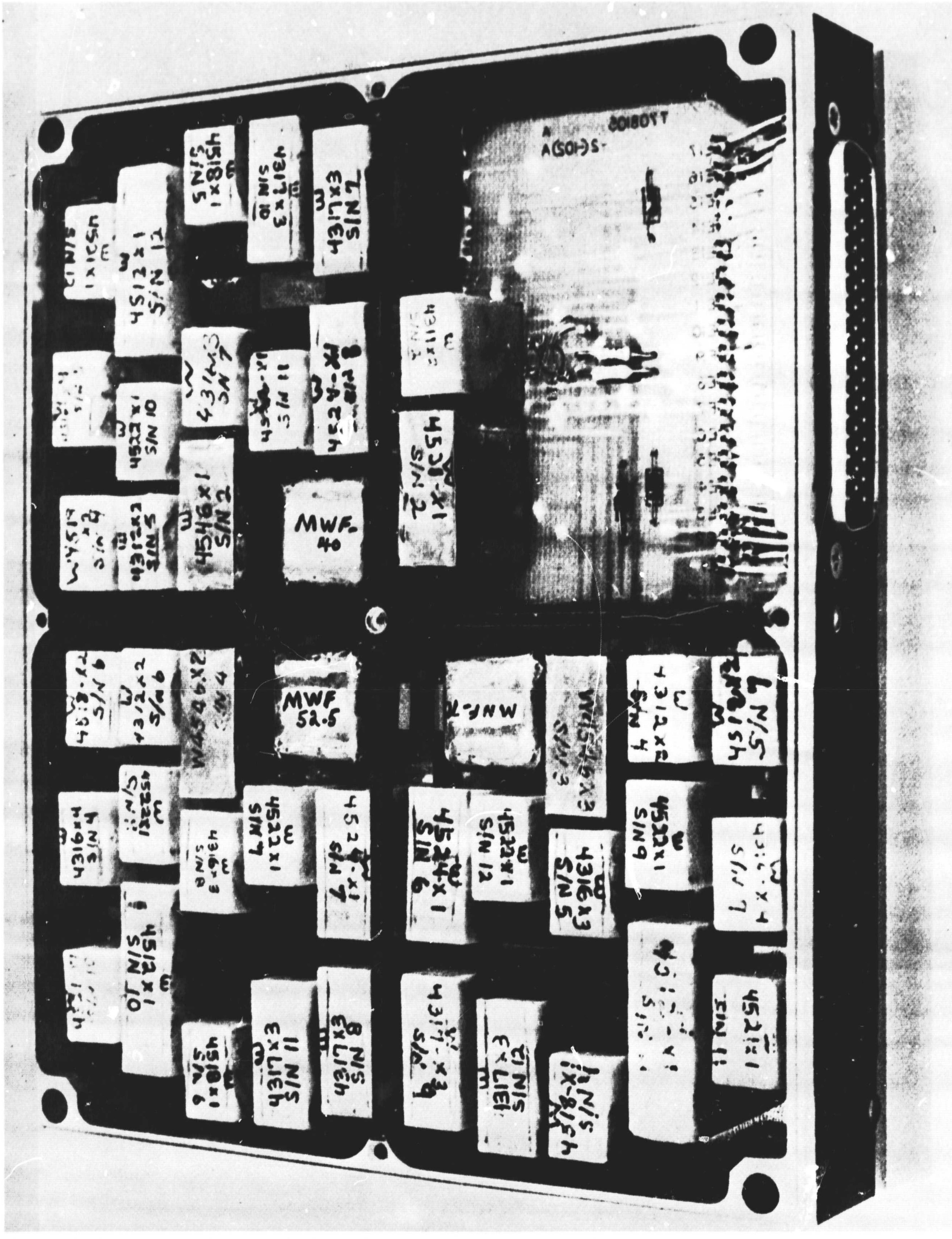

FIGURE 24. WAVEFORM-WIDEBAND BLIVET

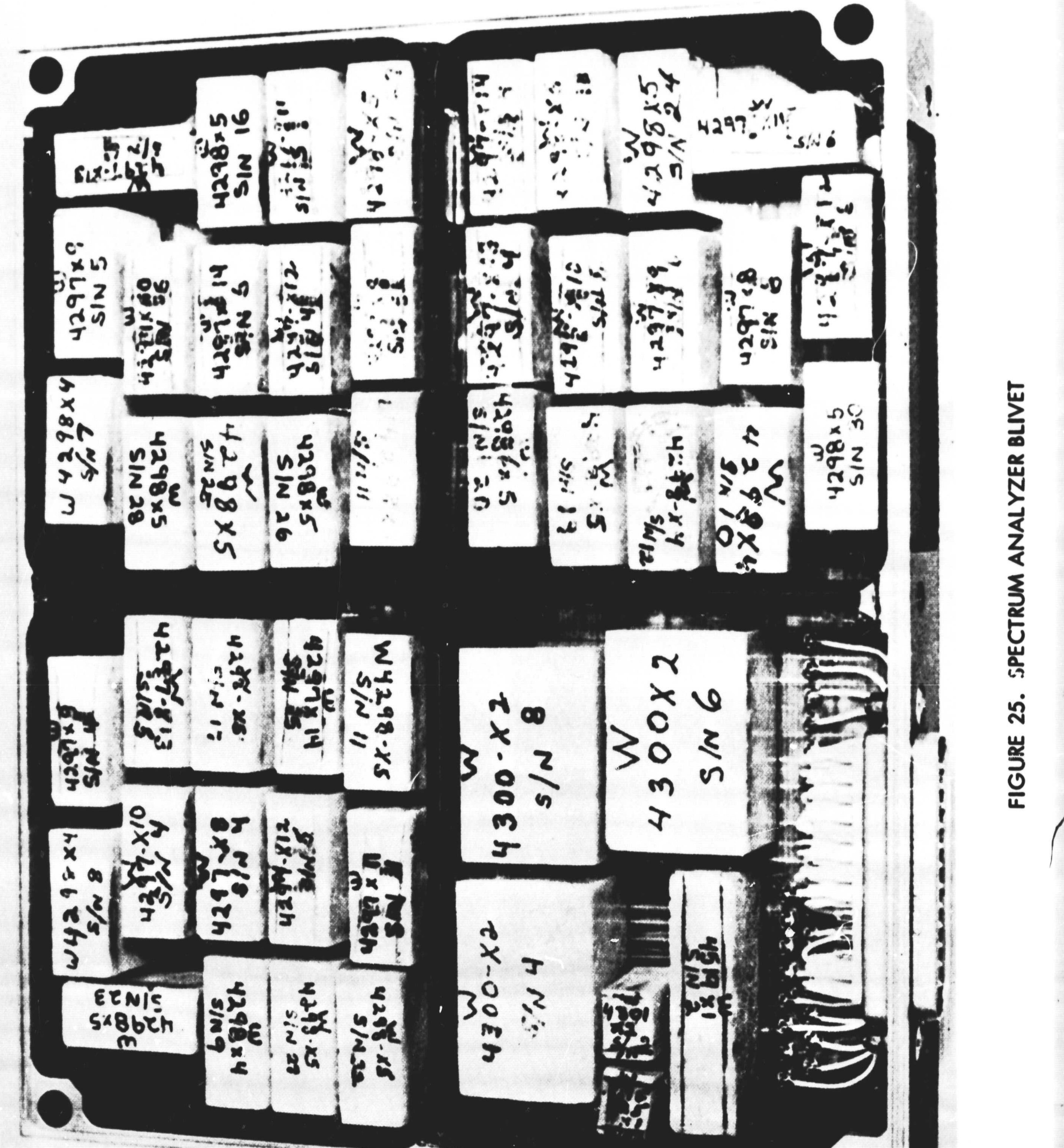

FIGURE 25. SPECTRUM ANALYZER BLIVET

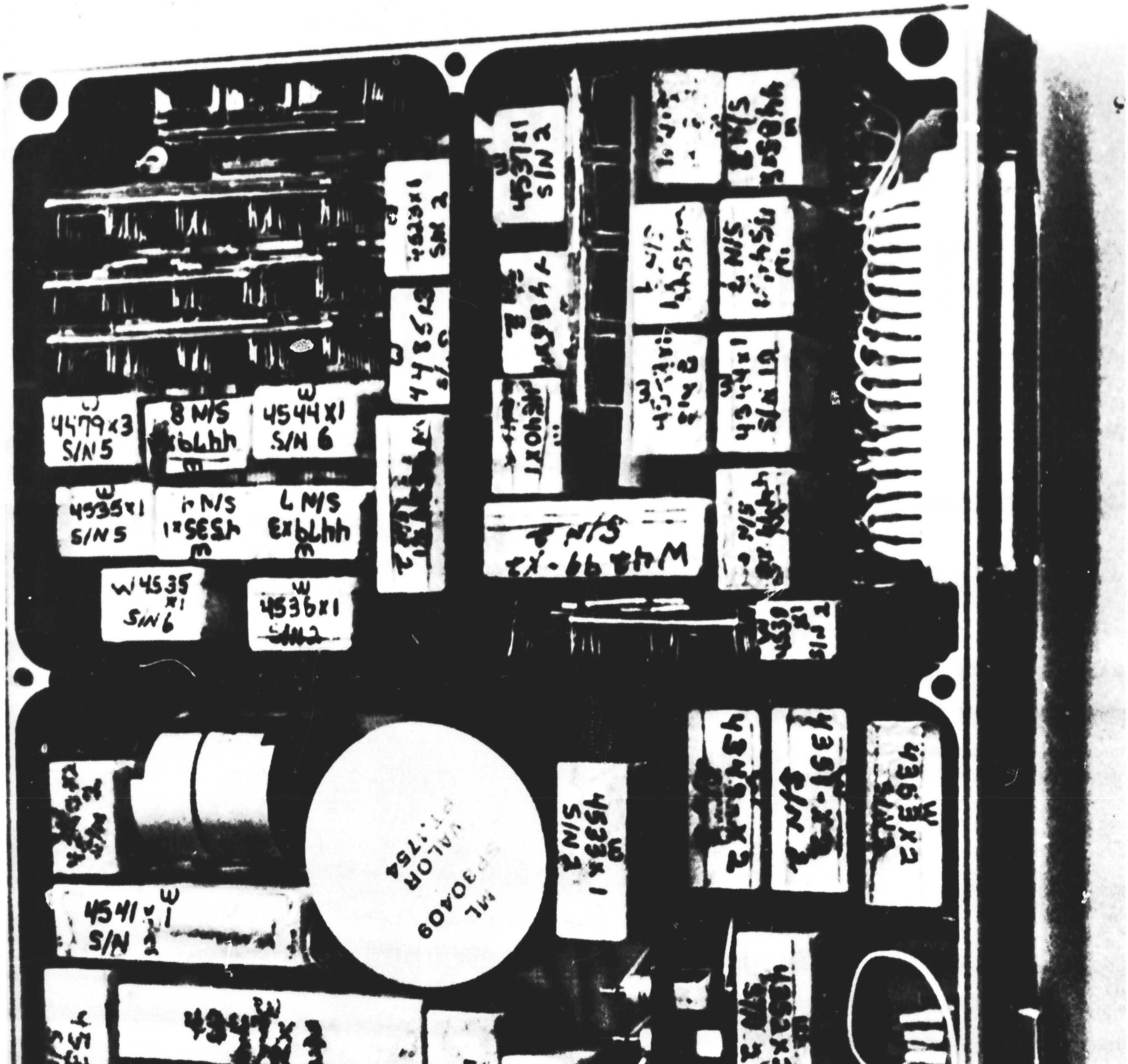

FIGURE 26. POWER SUPPLY & LOGIC BLIVET

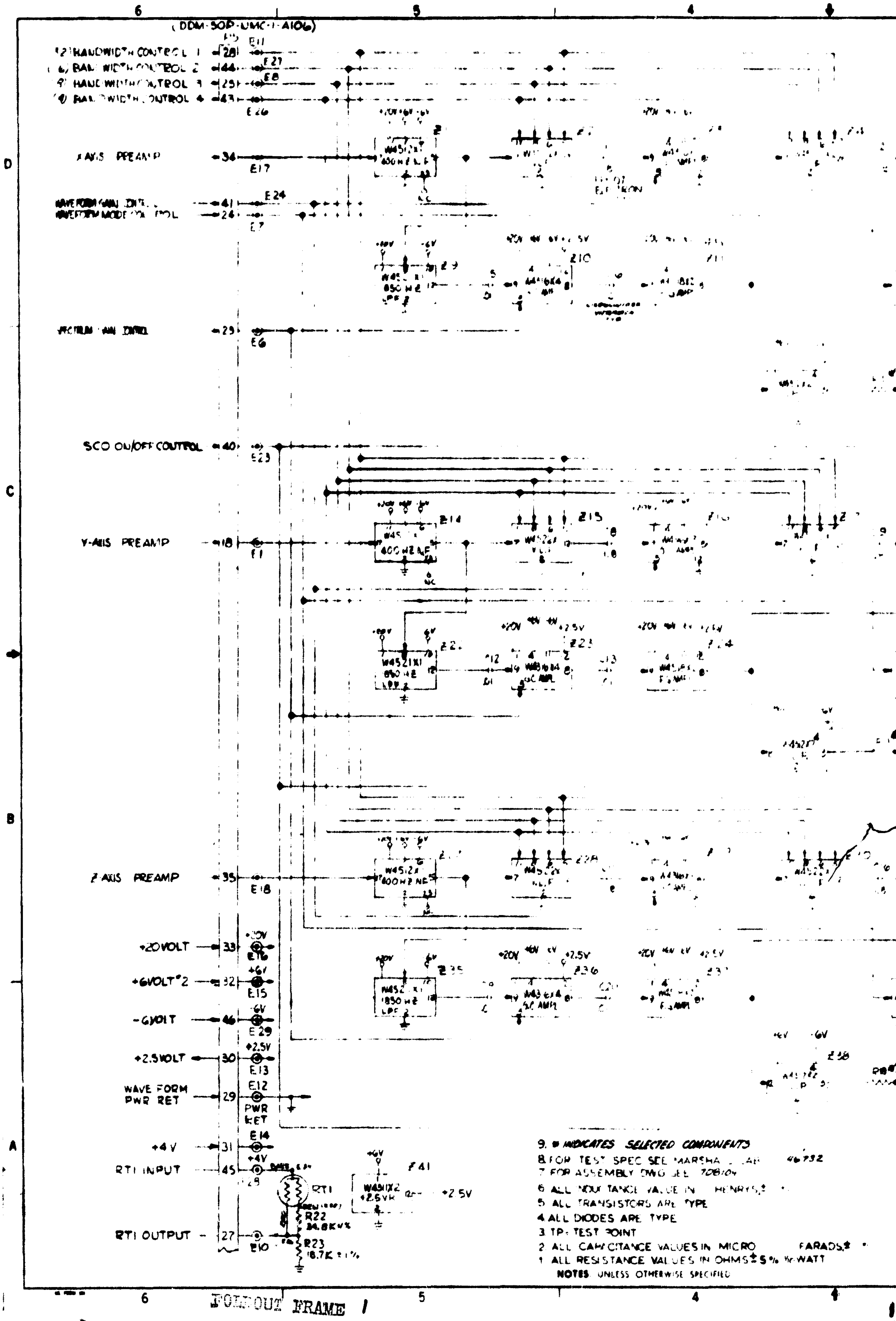

9. ⊕ INDICATES SELECTED COMPONENTS
8. FOR TEST SPEC SEE MARSHALL LAB 46732
7. FOR ASSEMBLY DWG SEE 70B104
6. ALL INDUCTANCE VALUES IN HENRYS±
5. ALL TRANSISTORS ARE TYPE
4. ALL DIODES ARE TYPE
3. TP = TEST POINT
2. ALL CAPACITANCE VALUES IN MICRO FARADS±
1. ALL RESISTANCE VALUES IN OHMS ± 5% ¼ WATT

NOTES: UNLESS OTHERWISE SPECIFIED

FOLDOUT FRAME 1

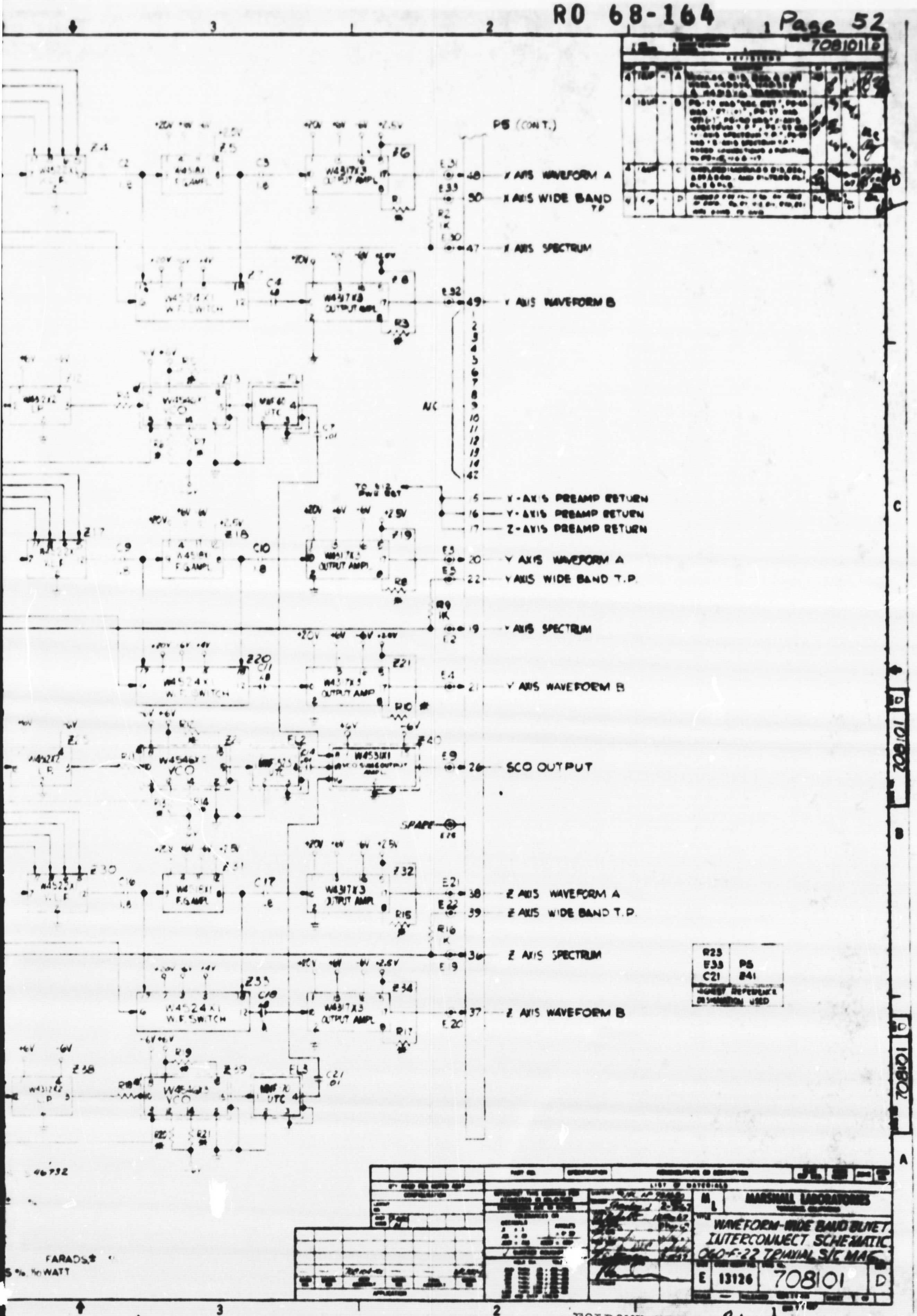
P5 (CONT.)
X AXIS WAVEFORM A
X AXIS WIDE BAND TP
X AXIS SPECTRUM
X AXIS WAVEFORM B
N/C
X-AXIS PREAMP RETURN
Y-AXIS PREAMP RETURN
Z-AXIS PREAMP RETURN
Y AXIS WAVEFORM A
Y AXIS WIDE BAND T.P.
Y AXIS SPECTRUM
Y AXIS WAVEFORM B
SCO OUTPUT
SPARE
Z AXIS WAVEFORM A
Z AXIS WIDE BAND T.P.
Z AXIS SPECTRUM
Z AXIS WAVEFORM B
W4524X1 W.F. SWITCH
W4517X3 OUTPUT AMPL
VCO
UTC
F/S AMPL
R25 E33 C21 P5 241
MARSHALL LABORATORIES
WAVEFORM-WIDE BAND BUFFER INTERCONNECT SCHEMATIC 060-F-22 TRIAXIAL S/C MAG
E 13126 708101 D
708101

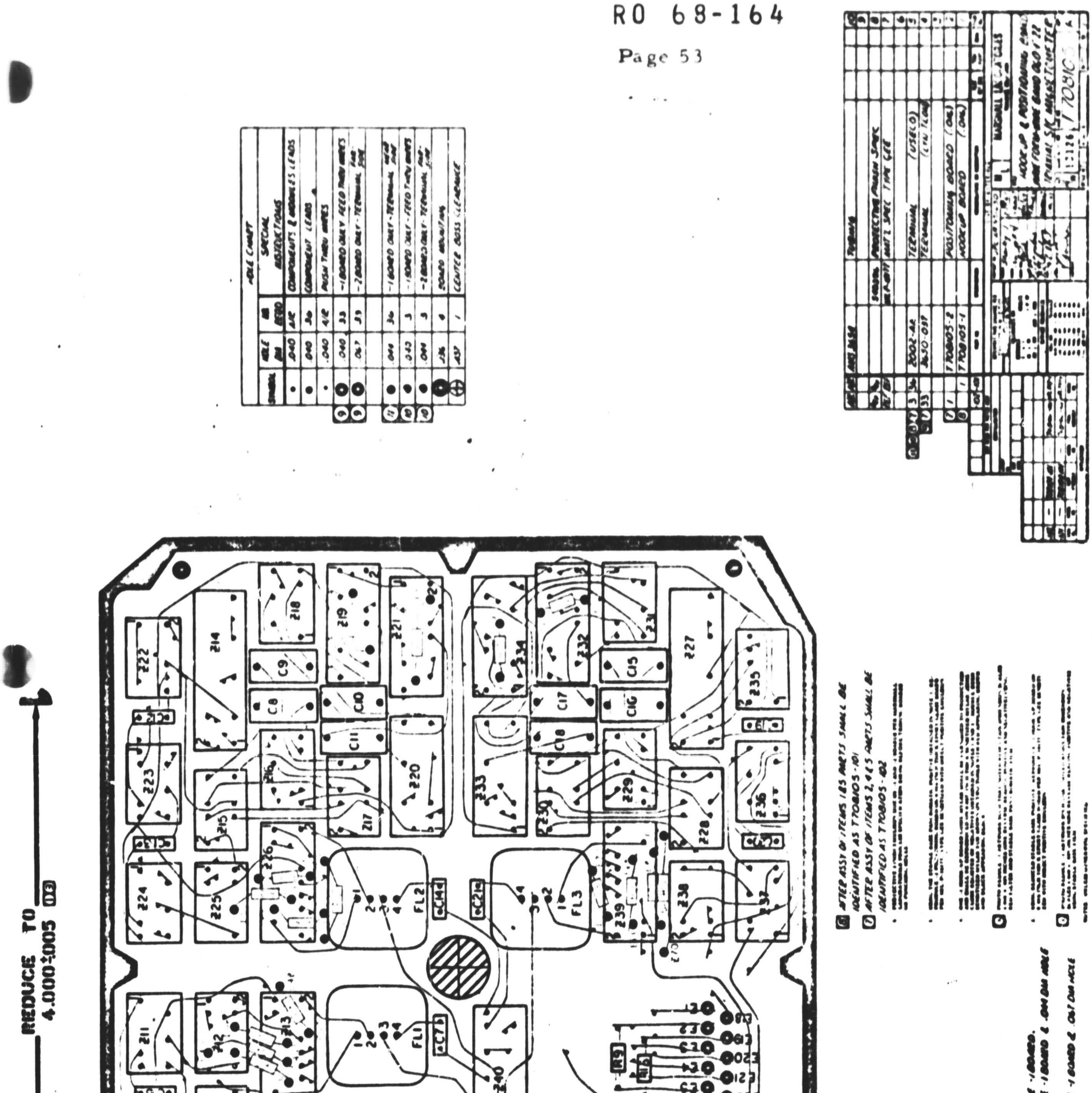
REDUCE TO
4.000±.005
AFTER ASSY OF ITEMS 1 & 5 PARTS SHALL BE IDENTIFIED AS T708105-101
AFTER ASSY OF ITEMS 2, 4 & 5 PARTS SHALL BE IDENTIFIED AS T708105-102

69

FOLDOUT FRAME

WIRING LIST

FROM	TO	FUNCTION	WIRE TYPE
P3-1		SPARE	
-2			
-3			
-4			
-5			
-6			
-7			
-8			
-9			
-10			
-11			
-12			
-13	[illegible]		[illegible]
-14	[illegible]	SPARE	
-15	-E12	X-AXIS PREAMP RETURN	
-16	-E12	Y-AXIS PREAMP RETURN	
-17	-E12	Z-AXIS PREAMP RETURN	
18	E1	Y-AXIS PREAMP	
19	E2	Y-AXIS SPECTRUM	
-20	E3	Y-AXIS WAVEFORM A	
-21	E4	Y-AXIS WAVE FORM B	
-22	E5	Y-AXIS WIDE BAND T.P.	
-23	E6	SPECTRUM GAIN CONTROL	
-24	E7	WAVE FORM MODE CONTROL	
-25	E8	BAND WIDTH CONTROL 3	
-26	E9	SCO OUTPUT	
-27	E10	RTI OUTPUT	
-28	E11	(32) BAND WIDTH CONTROL 1	
-29	E12	WAVE FORM POWER RETURN	
-30	E13	+2.5 VOLT	
-31	E14	+4 VOLT	
-32	E15	+6 VOLT #2	
-33	E16	+20 VOLT	
-34	E17	X-AXIS PREAMP	
-35	E18	Z-AXIS PREAMP	
-36	E19	Z-AXIS SPECTRUM	
-37	E20	Z-AXIS WAVE FORM B	
-38	E21	Z-AXIS WAVE FORM A	
-39	E22	Z-AXIS WIDE BAND T.P.	
-40	E23	SCO ON/OFF CONTROL	
-41	E24	WAVE FORM GAIN CONTROL	AWG 28
-42		SPARE	
-43	E26	(8) BAND WIDTH CONTROL 4	AWG 28
-44	E27	(16) BAND WIDTH CONTROL 2	
-45	E28	RTI INPUT	
-46	E29	-6 VOLT	
-47	E30	X-AXIS SPECTRUM	
-48	E31	X-AXIS WAVE FORM A	
-49	E32	X-AXIS WAVE FORM B	
P3-50	E33	X-AXIS WIDE BAND T.P.	AWG 28
E25		SPARE	
RTI-[illegible]	E36	RTI [illegible]	—
RTI-[illegible]	E37	RTI [illegible]	—
RTI-[illegible]	E38	RTI	—

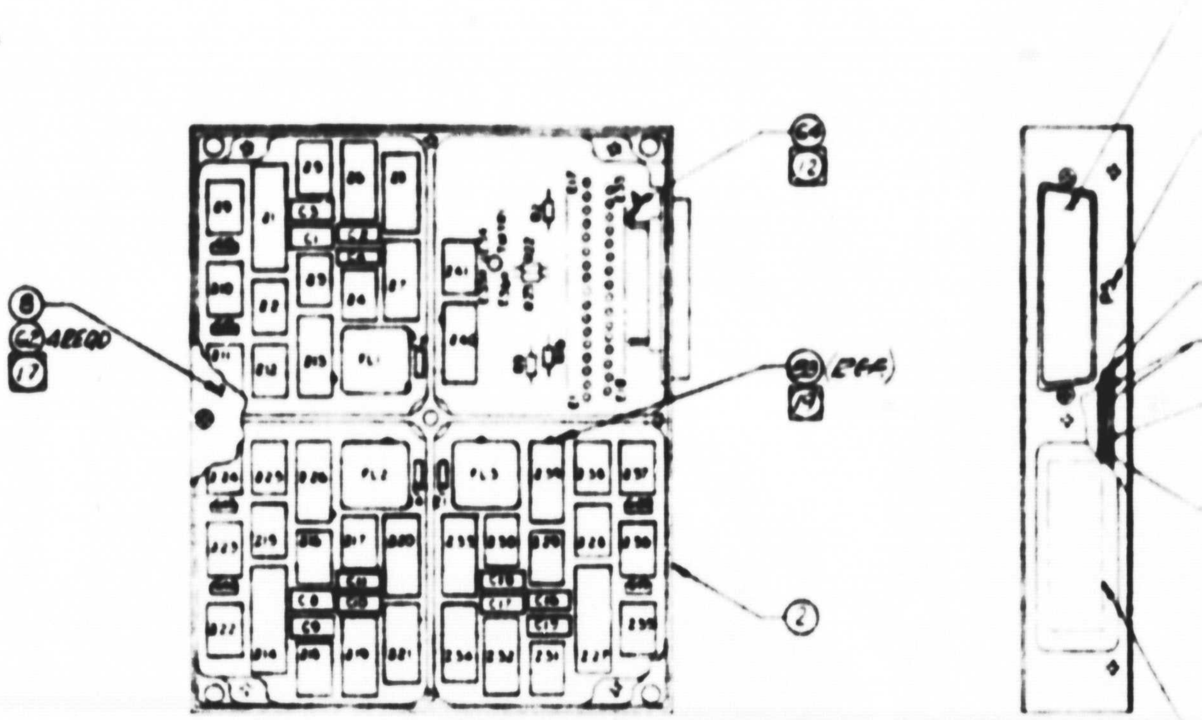

19. INCASE EACH OF THE FOLLOWING MODULES & FILTERS WITH ITEM NO. 89 (C... Z13, Z26, Z39, Z40, FL1, FL2, & FL3). INSTALL ITEM NO. 83 (SHIELD TERM... TO HOOK-UP LEVEL. SOLDER SHIELD TERMINATIONS PER S40126...
18. TEST PER ML SPEC S46732.
17. TORQUE ITEM 62 TO 2.5 INCH LBS $^{+10\%}_{-10\%}$.
16. TORQUE ITEM 58161 TO 4.0 INCH LBS $^{+10\%}_{-10\%}$.
15. MARKING: BLACK APPROX AS SHOWN PER ML SPEC S40111, CLASS I, TYPE III
14. MARKINGS: BLACK, APPROX AS SHOWN USING ITEM 85 PER ML SPEC S40111, CLASS I...
13. CORRELATE REF DESIGNATIONS TO COMPONENTS BY SEPARATE LIST OF MAT'L.
12. SOLDER PER ML SPEC S40126 & ALL TERMINALS AS SHOWN.
11. CONNECTOR TO BE SEALED PER ML SPEC S40093, CLASS III, TYPE I.
10. FOAM-IN-PLACE COMPONENT CAVITIES ONLY, PER ML SPEC S40092, CLASS I, TYPE I, CURE...
9. CONFORMAL COAT ITEM 1 PER ML SPEC S40091, CLASS I, TYPE I @ 170°F
8. SPOT POT (AS REQ'D) PER ML SPEC S40379, CLASS II, TYPE I.
7. BOND ITEM 88 INTO GROVE OF ITEM 2 AT APPROX 1.0 INCH INTERVALS, USING ITEM 79.
6. FILLET BOND ITEM 1 (HOOK-UP & POSITIONING BOARD SIDE) TO ITEM 2 PER ML SPEC...
5. MANUFACTURE PER ML SPEC S40072
4. ASSEMBLE COMPONENTS TO MATRIX PER ML SPEC S40081
3. USE ASSEMBLE JIG SF30253-9 FOR FAB & ASSY OF ITEMS 3,4,5,6 & 7 & BOND PER ML SPEC...
2. FABRICATE ITEM 1 PER ML SPEC S40094
1. FOR SCHEMATIC REFER TO ML DWG 708101

NOTES: UNLESS OTHERWISE SPECIFIED

708104 A

RO 68-164

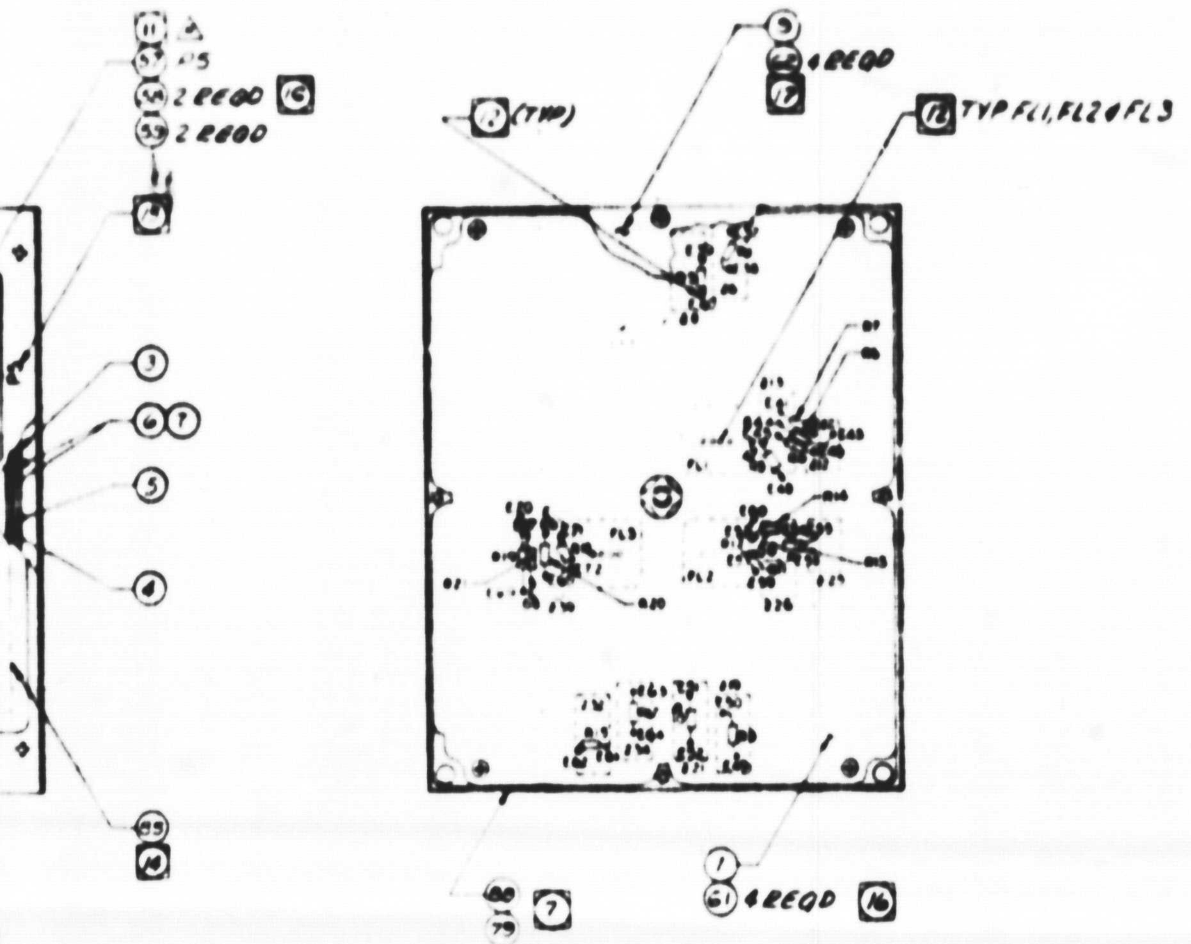

...89 (COPPER FOIL)
...O TERMINATING WIRE) THRU
...540126.

...ASS I.

...E I, CURE I, @ 170°F, 1 HOUR.

...TEM 79.
...ML SPEC 540149, TYPE I.

...ML SPEC 540149, TYPE I.

SEE SEPARATE LIST OF MAT'L

LIST OF MATERIALS

-101	—	708100-101	—	FINAL	13371

APPLICATION

MARSHALL LABORATORIES

ASSEMBLY — WAVE FORM - WIDE BAND 060-F-22 TRIAXIAL S/C MAG.

SIZE	CODE IDENT NO.	DWG NO.	REV
F	13126	708104	A

SCALE 1/1 SHEET 1 OF 1

708104 A

708104 A

1

FOLDOUT FRAME 1

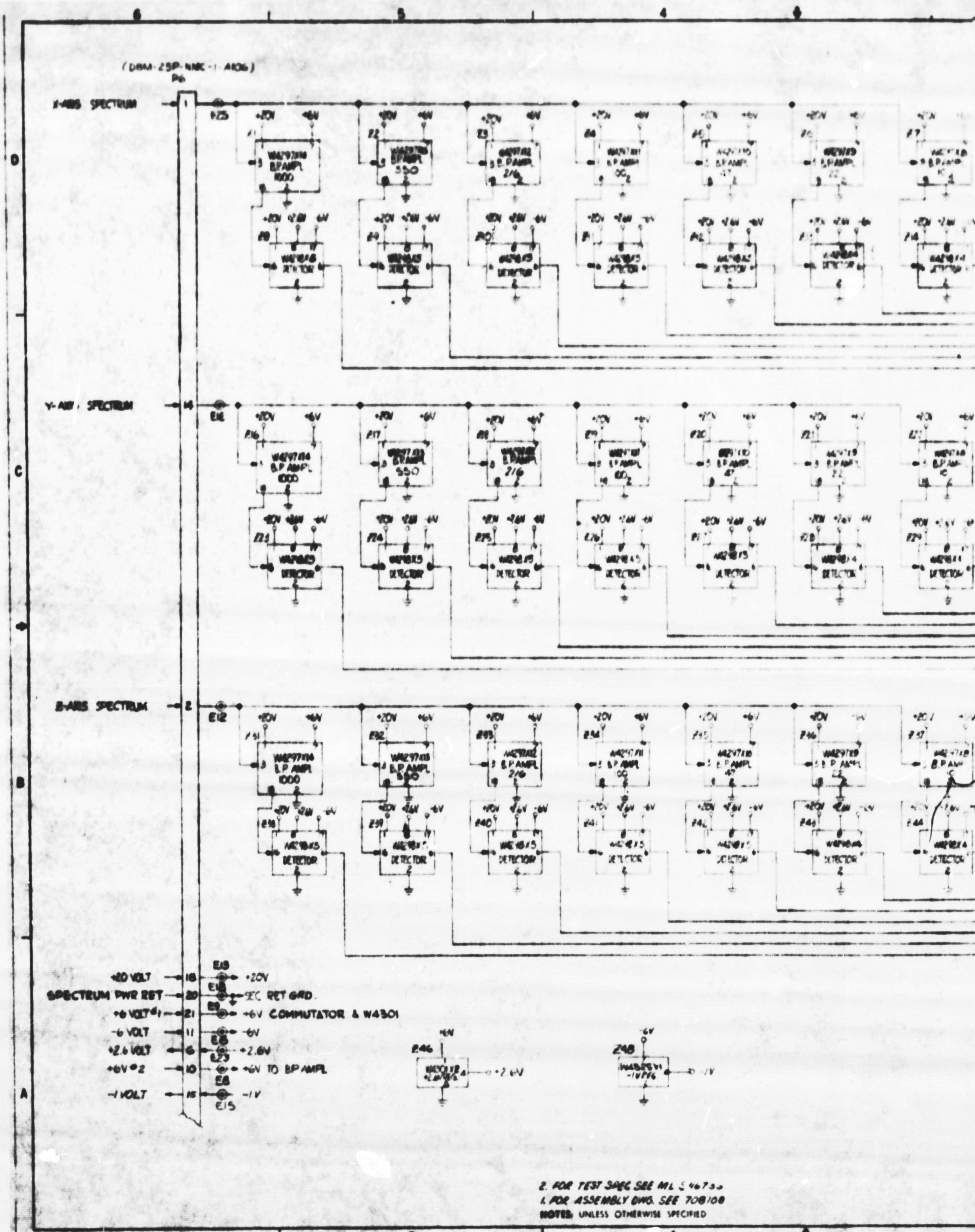

FOLDOUT FRAME 2

Page 55

RO 68-164

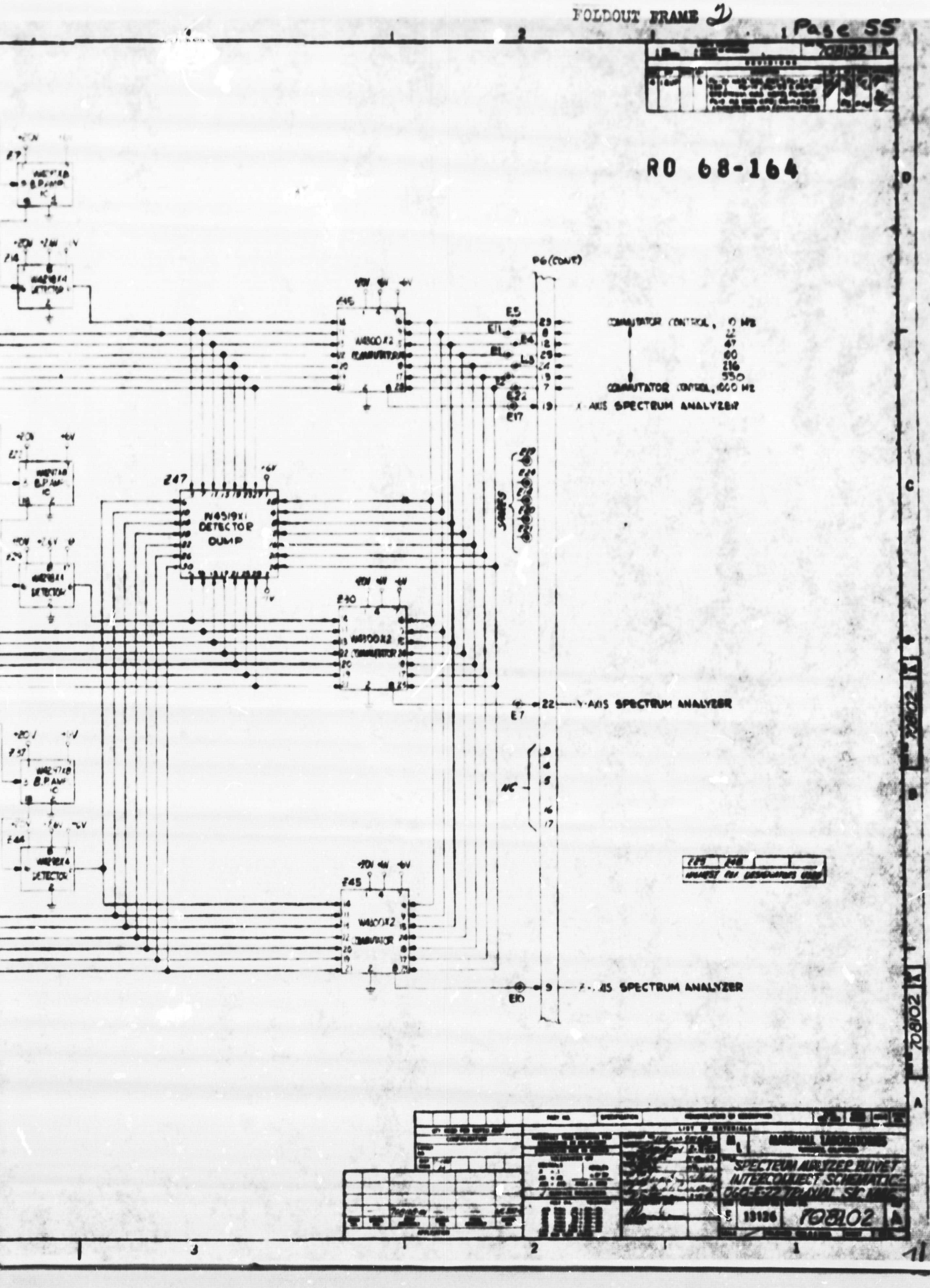

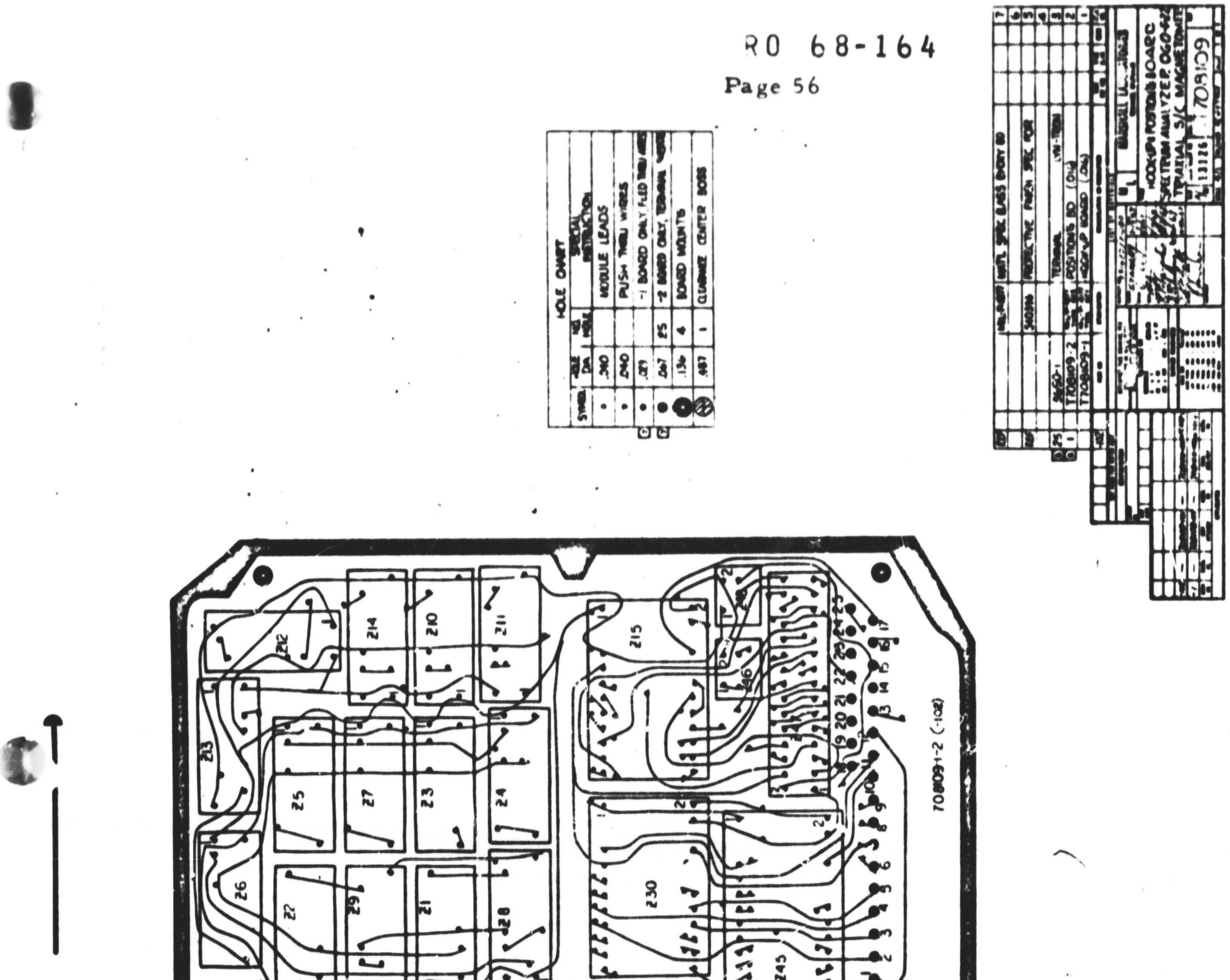

FOLDOUT FRAME 1

4 | 3

D

C

B

A

WIRING LIST

FROM	TO	FUNCTION	WIRE TYPE
P6-1	E25	X-AXIS SPECTRUM	AWG 28
-2	E12	Z-AXIS SPECTRUM	AWG 28
-3		SPARE	
-4		SPARE	
-5		SPARE	
-6	E23	+2.6 VOLT	AWG 28
-7	E22	COMMUTATOR CONTROL, 1000 HZ	
-8	E11	COMMUTATOR CONTROL, 22 HZ	
-9	E10	Z-AXIS SPECTRUM ANALYZER	
-10	E8	+6 VOLT #2 (BP AMPL)	
-11	E6	-6 VOLT	
-12	E4	COMMUTATOR CONTROL, 47 HZ	
-13	E2	COMMUTATOR CONTROL, 550 HZ	
-14	E16	Y-AXIS SPECTRUM	
-15	E15	-1 VOLT	AWG 28
-16		SPARE	
-17		SPARE	
-18	E13	+20 VOLT	AWG 28
-19	E17	X-AXIS SPECTRUM ANALYZER	
-20	E18	SPECTRUM POWER RETURN	
-21	E9	+6 VOLT #1 (COMMUTATOR & 2.6V REG)	
-22	E7	Y-AXIS SPECTRUM ANALYZER	
-23	E5	COMMUTATOR CONTROL, 10 HZ	
-24	E3	COMMUTATOR CONTROL, 216 HZ	
P6-25	E1	COMMUTATOR CONTROL, 100 HZ	AWG 28
E14		SPARE	
E19			
E20			
E21			
E24		SPARE	

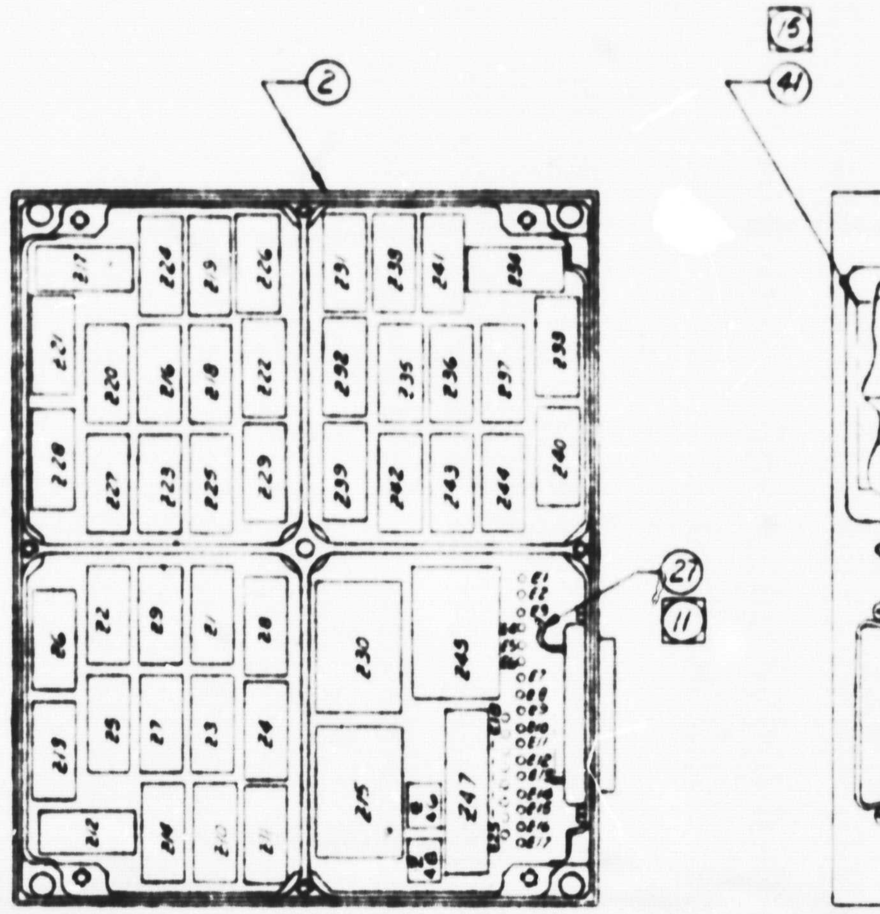

18. TORQUE ITEM 25 TO 2.5 INCH LBS +0% -10%.
17. TEST PER ML SPEC. S46733.
16. MARKINGS: BLACK, APPROX. AS SHOWN PER ML SPEC S40111, CLASS I, TYPE III.
15. MARKINGS: BLACK, APPROX AS SHOWN USING ITEM 41 PER ML SPEC S40111, CLASS I.
14. CORRELATE REF DESIGNATIONS TO COMPONENTS BY SEPARATE LIST OF MAT'L.
13. TORQUE ITEM 24 TO 4.0 INCH LBS +0% -10%.
12. CONNECTOR TO BE SEALED PER ML SPEC S40093, CLASS III, TYPE I.
11. SOLDER PER ML SPEC S40126.
10. FOAM-IN-PLACE COMPONENT CAVITIES ONLY, PER ML SPEC S40092, CLASS I, TYPE I, CURE I, @ 170°F, 1 HOUR.
9. CONFORMAL COAT ITEM 1 PER ML SPEC S40091, CLASS I, TYPE I @ 170°F.
8. SPOT POT (AS REQ'D) PER ML SPEC S40379, CLASS II, TYPE I.
7. BOND ITEM 44 INTO GROOVE OF ITEM 1 AT APPROX. 1.0 IN. INTERVALS, USING ITEM 30.
6. FILLET BOND ITEM 1 (HOOK-UP & POSITIONING SIDE) TO ITEM 2 PER ML SPEC S40149, TYPE I.
5. MANUFACTURE PER ML SPEC S40072.
4. ASSEMBLE COMPONENTS TO MATRIX PER ML SPEC S40081.
3. USE ASSEMBLY JIG SP30253-9 FOR FAB & ASSY OF ITEMS 3, 4, 5, 6 & 7 & BOND PER ML SPEC S40149, TYPE I.
2. FABRICATE ITEM 1 PER ML SPEC S40094.
1. FOR SCHEMATIC REFER TO ML DWG 708102.

NOTES: UNLESS OTHERWISE SPECIFIED

-101 DASH NO.

4 | 3

FOLDOUT FRAME 2

DWG NO.	708108	A

REVISIONS

ZONE	LTR	DESCRIPTION	DATE
	A	ADDED ☐ TO NOTE #12	

RO 68-164

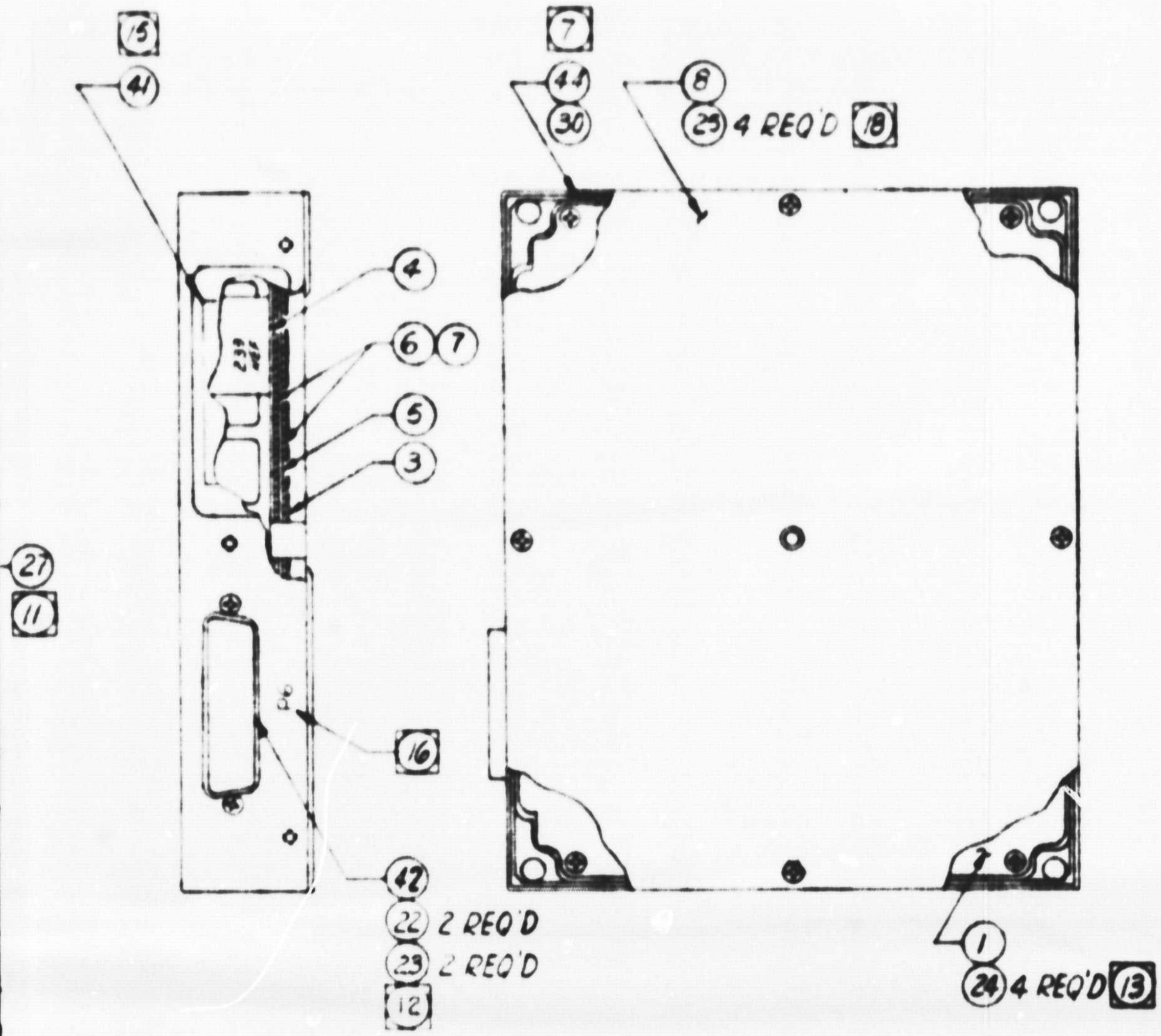

SEE SEPARATE LIST MAT'L

PART NO.	SPECIFICATION	NOMENCLATURE OR DESCRIPTION	ZONE	ITEM NO.

LIST OF MATERIALS

DASH NO.	MODEL NO.	NEXT ASSEMBLY	MODEL NO.	FINAL ASSEMBLY	MODEL NO.
-101	—	703100-101	—	FINAL	ML3371

APPLICATION

QTY REQD PER NOTED ASSY — CONFIGURATION — LAYOUT NO. — DIST CODE 7.080 A

INTERPRET THIS DRAWING PER STANDARDS IN MIL-D-70327
DIMENSIONS ARE IN INCHES
TOLERANCES ON DECIMALS: .X ± .1, .XX ± .03, .XXX ± .010; ANGLES ± 0° 30'; .XXXX ± .0050
✓ SURFACE ROUGHNESS

CONTRACT NO JPL NO 951630
DRAWN Stanley 5-9-67
CHECK 5/10/67
DESIGN ACTIVITY APPD 5-15-67
CUSTOMER

MARSHALL LABORATORIES
TORRANCE, CALIFORNIA

TITLE ASSEMBLY- SPECTRUM ANALYZER OGO-F-22 TRIAXIAL S/C MAG.

SIZE	CODE IDENT NO.	DWG NO.	REV
D	13126	708108	A

SCALE 1/1 — RELEASED MAY 16 1967 — SHEET 1 OF 1

TYPE I.

FOLDOUT FRAME 1

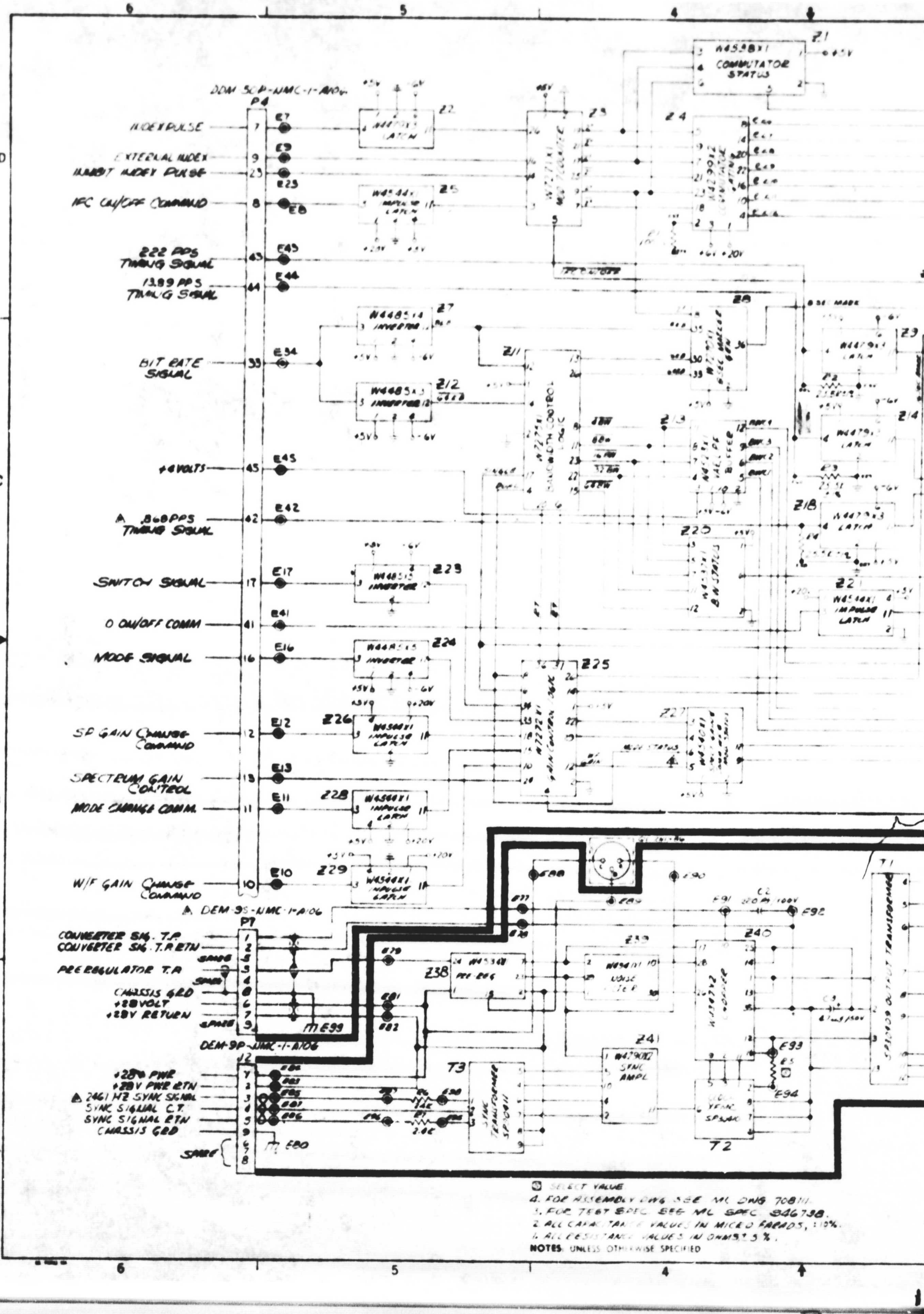

FOLDOUT FRAME 2

Page 58

RO 68-164

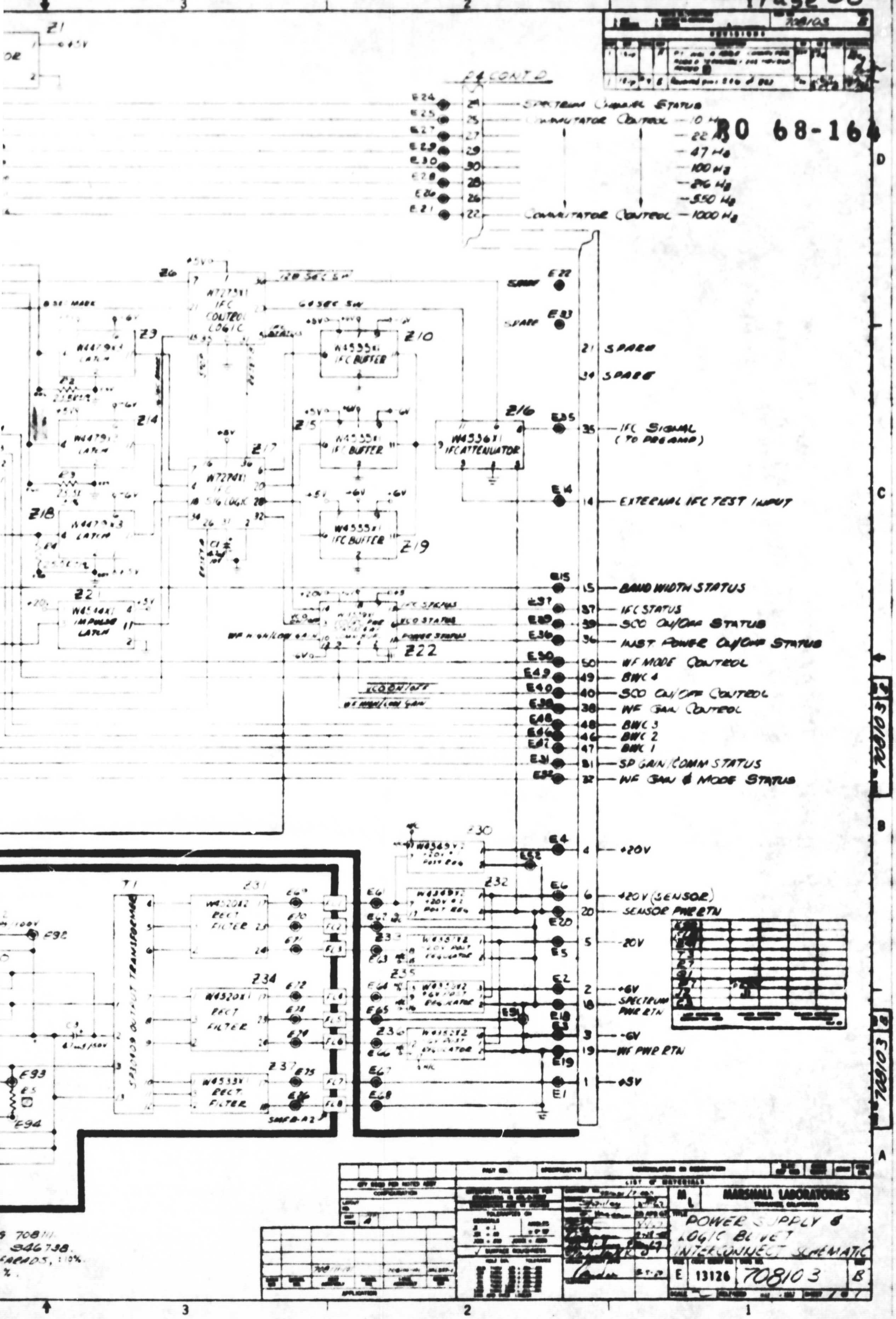

REDUCE TO 4.000 ± .005

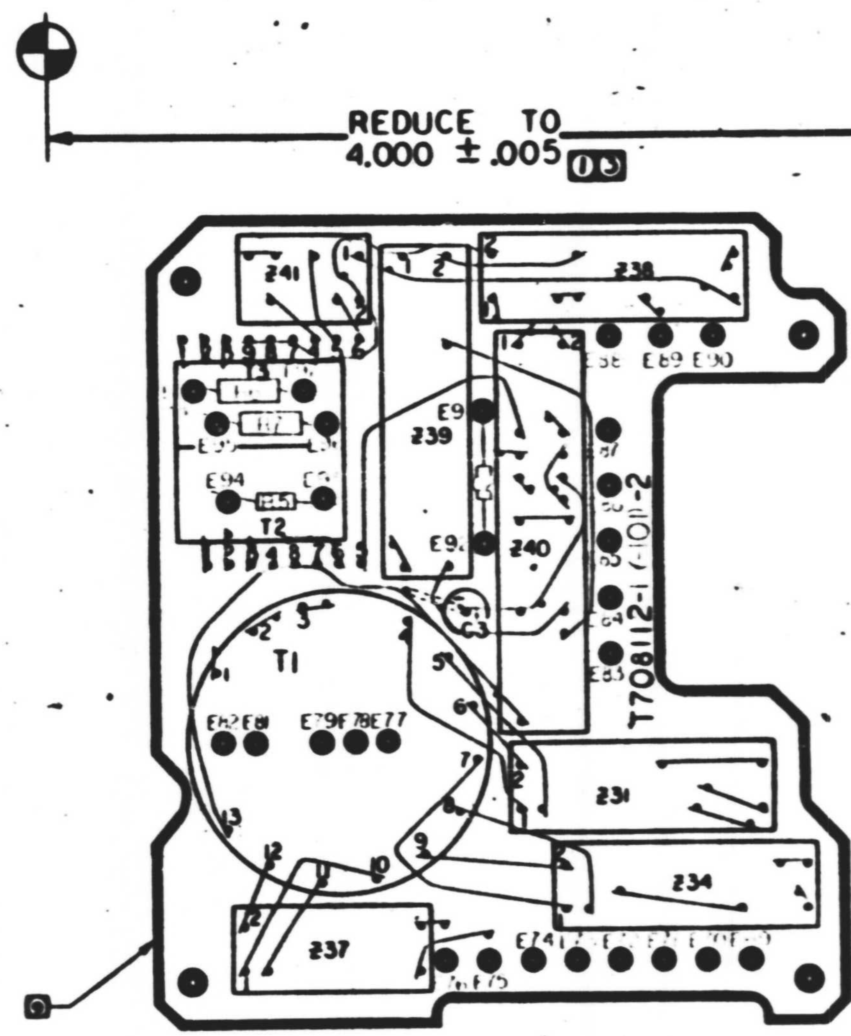

Symbol	Hole Dia	No. Reqd	Special Instructions
•	.040	4/E	COMPONENTS & MODULE LEADS
•	.040	4/E	PUSH THRU WIRES
●	.067	29	-1 BOARD ONLY - TERMINAL [illegible]
●	.136	4	BOARD MOUNTING

		AR	AMS 3654		TUBING				9
									9
		AR		[illegible]	PROTECTIVE FINISH SPEC				8
									7
		AR		[illegible]	MATL SPEC TYPE GEE				6
									5
6 7		29	3850-037		TERMINAL (LVN TERM)				4
									3
			T708112-2		POSITIONING BOARD (.016)				2
7		1	T708112-1		HOOKUP BOARD (.016)				1

T708112

9 DRILL/PUNCH ALL HOLES TO [illegible] CHART AND [illegible]

6 INDICATES .067 DIA HOLE -1 BOARD ONLY

7 AFTER ASSY OF ITEMS 1 & 4 PARTS SHALL BE IDENTIFIED AS T708112-101

RO 68-164

Page 60

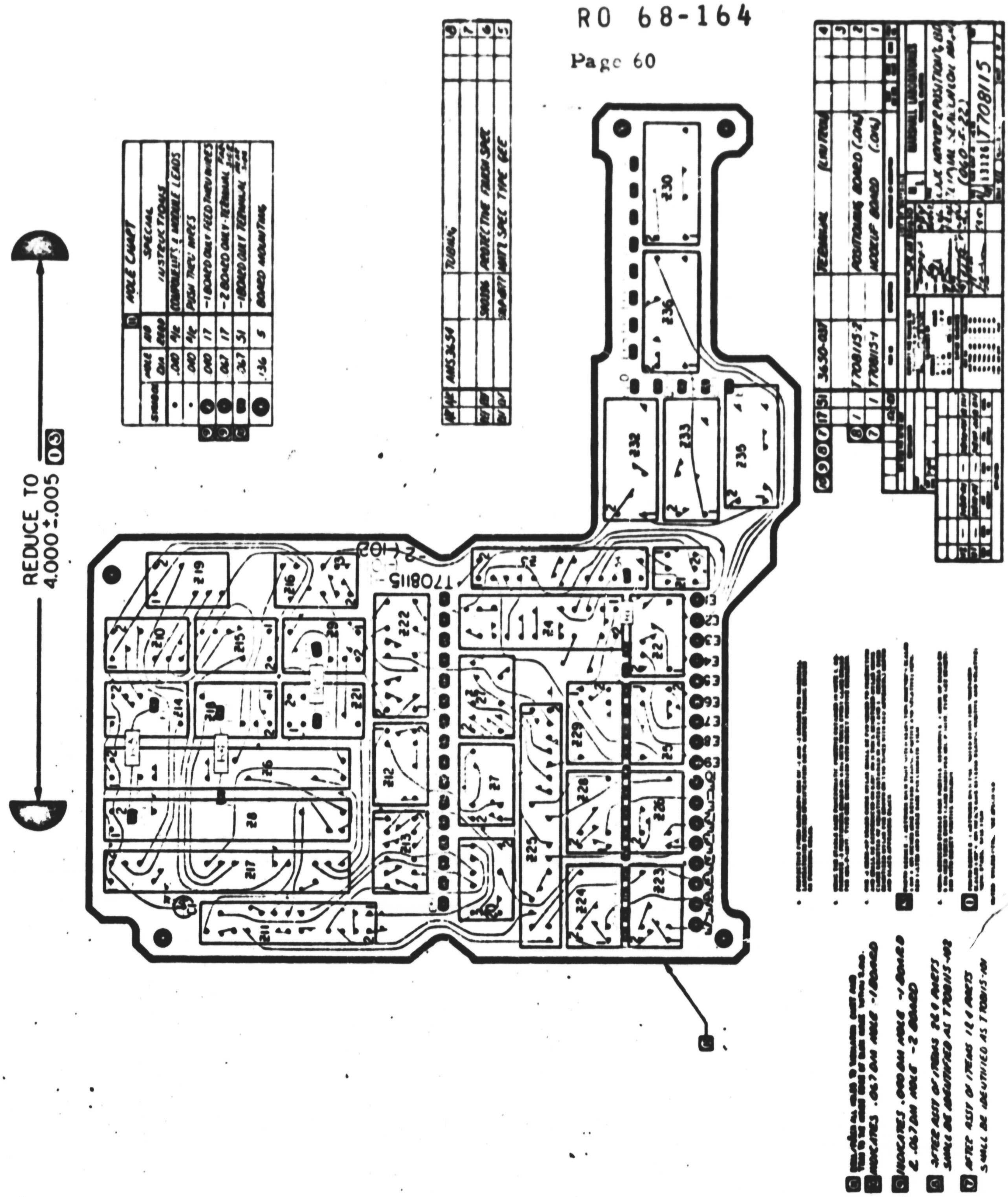

FOLDOUT FRAME

FROM	TO	FUNCTION	WIRE TYPE
J2-1	E84	+28 V PWR	AWG 2A
-2	E83	+28 V PWR RET	
-3	E85	2461 HZ SYNC SGNL	
-4	E87	SYNC SIGNAL CT	
-5	E86	SYNC SIGNAL RET	
-6	PIGTAIL	SPARE	
-7	PIGTAIL	SPARE	AWG 28
-8		SPARE	
J2-9	E80	CHASSIS GRD	AWG 28
P4-1	E1	+5V	
-2	E2	+6V	
-3	E3	-6V	
-4	E4	+20V	
-5	E5	-20V	
-6	E6	+20V (SENSOR)	
-7	E7	INDEX PULSE	
-8	E8	IFC ON/OFF COMMAND	
-9	E9	EXTERNAL INDEX	
-10	E10	W/F GAIN CHANGE COMMAND	
-11	E11	MODE CHANGE COMM	
-12	E12	SP GAIN CHANGE COMM	
-13	E13	SPECTRUM GAIN CONTROL	
-14	E14	EXTERNAL IFC TEST INPUT	
-15	E15	BAND WIDTH STATUS	
-16	E16	MODE SIGNAL	
-17	E17	SWITCH SIGNAL	
-18	E18	SPECTRUM POWER RET	
-19	E19	WF PWR RET	
-20	E20	SENSOR PWR RET	AWG 28
-21	—	SPARE	
-22	E21	COMMUTATOR CONTROL-1000HZ	AWG 28
-23	E23	INHIBIT INDEX PULSE	
-24	E24	SPECTRUM CHANNEL STATUS	
-25	E25	COMMUTATOR CONTROL-10HZ	
-26	E26	-550HZ	
-27	E27	-22HZ	
-28	E28	-216HZ	
-29	E29	-47HZ	
-30	E30	COMMUTATOR CONTROL-100HZ	
-31	E31	SP GAIN/COMM STATUS	
-32	E32	WF GAIN & MODE STATUS	
-33	E34	BIT RATE SIGNAL	AWG 28
-34	—	SPARE	—
-35	E35	IFC SIGNAL (TO PREAMP)	AWG 28
-36	E36	INST POWER ON/OFF STATUS	
-37	E37	IFC STATUS	
-38	E38	WF GAIN CONTROL	
-39	E39	SCO ON/OFF STATUS	
-40	E40	SCO ON/OFF CONTROL	
-41	E41	SCO ON/OFF COMM.	
-42	E42	.868 PPS TIMING SIGNAL	
-43	E43	222 PPS TIMING SIGNAL	
-44	E44	6.89 PPS TIMING SIGNAL	
-45	E45	+4 VOLTS	
-46	E46	BWC 2	
-47	E47	BWC 1	
-48	E48	BWC 3	
-49	E49	BWC 4	
P4-50	E50	WF MODE CONTROL	AWG 28
P7-1	E77	CONVERTER SIG T.P.	ITEM 100
-2	E78	CONVERTER SIG T.P. RET	ITEM 100
-3	E79	PRE-REGULATOR T.P.	ITEM 98
-4	—	SPARE	—
-5	—	SPARE	—
-6	E81	+28 V	ITEM 100
-7	E82	+28 V RET.	ITEM 100
-8	E99	CHASSIS GRD	AWG 28
P7-9	PIGTAIL	SPARE	
E69	FL1(IN)	+20 V	
FL1(OUT)	E61	+20 V	
E70	FL2(IN)	+20 V RET	
FL2(OUT)	E62	+20 V RET	
E71	FL3(IN)	-20 V	
FL3(OUT)	E63	-20 V	
E72	FL4(IN)	+6 V	
FL4(OUT)	E64	+6 V	
E73	FL5(IN)	+6 V RET	
FL5(OUT)	E65	+6 V RET	
E74	FL6(IN)	-6 V	
FL6(OUT)	E66	-6 V	
E75	FL7(IN)	+5 V	
FL7(OUT)	E67	+5 V	
E76	FL8(IN)	WF PWR RET	
FL8(OUT)	E68	WF PWR RET	
Q1-E	E90		
Q1-B	E89		
Q1-C	E88		AWG-28

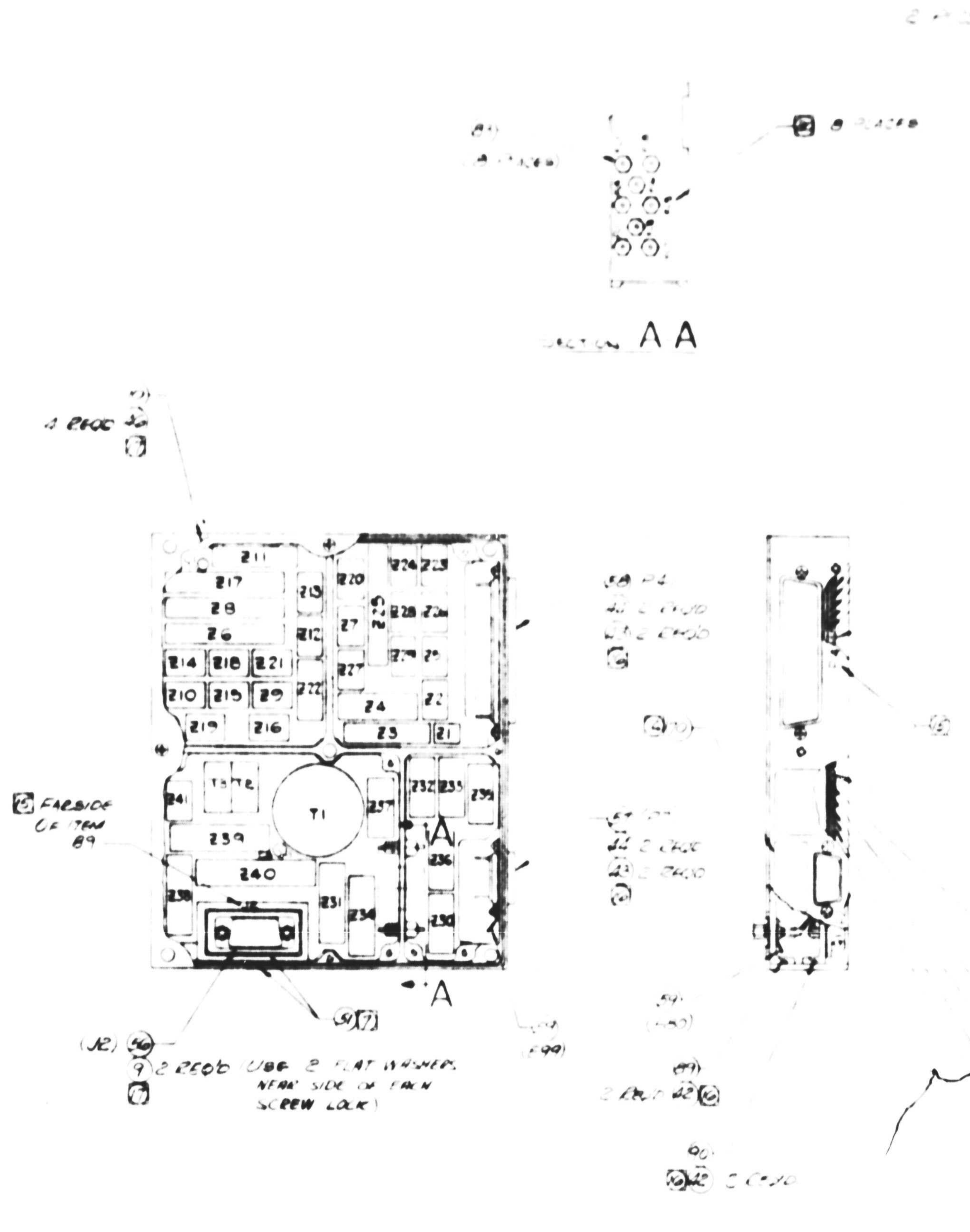

21. APPLY SILCON GREASE, ITEM 102, TO BOTH SIDES OF ITEM 78
20. MARKINGS: BLACK, APPROX AS SHOWN PER ML SPEC 540111, CLASS I, TYPE II
19. MANUFACTURE PER ML SPEC 540072.
18. TEST PER ML SPEC 546738.
17. TORQUE ITEMS 9 & 46 TO 2.5 INCH LBS $^{+0\%}_{-10\%}$.
16. TORQUE ITEM 42, 43 & 45 TO 4.0 INCH LBS ±8%.
15. MARKINGS: BLACK APPROX AS SHOWN PER ML SPEC 540111, CLASS I, TYPE III.
14. MARKINGS: BLACK, APPROX WHERE SHOWN, USING ITEM 70.
13. CORRELATE REF DESIGNATIONS TO COMPONENTS BY SEPARATE LIST OF MATE
12. SOLDER PER ML SPEC 540126 & ALL TERMINALS AS SHOWN.
11. CONNECTORS TO BE SEALED PER ML SPEC 540093, CLASS III, TYPE I.
10. FOAM-IN-PLACE MODULE CAVITIES ONLY, PER ML SPEC 540092, CLASS I, TYPE I, CURE I, @ 17
9. CONFORMAL COAT ITEMS 1 & 2 PER ML SPEC 540091, CLASS I, TYPE I @ 170°F.
8. SPOT POT (AS REQ'D) PER ML SPEC 540379, CLASS II, TYPE I.
7. BOND ITEM 51 INTO GROOVE OF ITEM 4, AT APPROX 1.0 INCH INTERVALS, USING ITEM 54
6. FILLET BOND ITEM 1 & ITEM 2 (HOOK-UP BOARD SIDE) TO ITEM 4 PER ML SPEC 5401
5. ASSEMBLE COMPONENTS TO MATRIX PER ML SPEC 540081.
4. USE ASSY JIG SP 30255-12 (-2) FOR FAB & ASSY OF ITEMS 5, 6, 7 & 8, BOND PER ML SPEC 540149
3. USE ASSY JIG SP 30347-13 (-1) FOR FAB & ASSY OF ITEMS 85, 86, 87 & 88, BOND PER ML SPEC 540149,
2. FABRICATE ITEM 1 PER ML SPEC 540094.
1. FOR SCHEMATIC REFER TO ML DWG 708103.

NOTES: UNLESS OTHERWISE SPECIFIED

FOLDOUT FRAME 2 1 Page 61

708111

RO 68-164

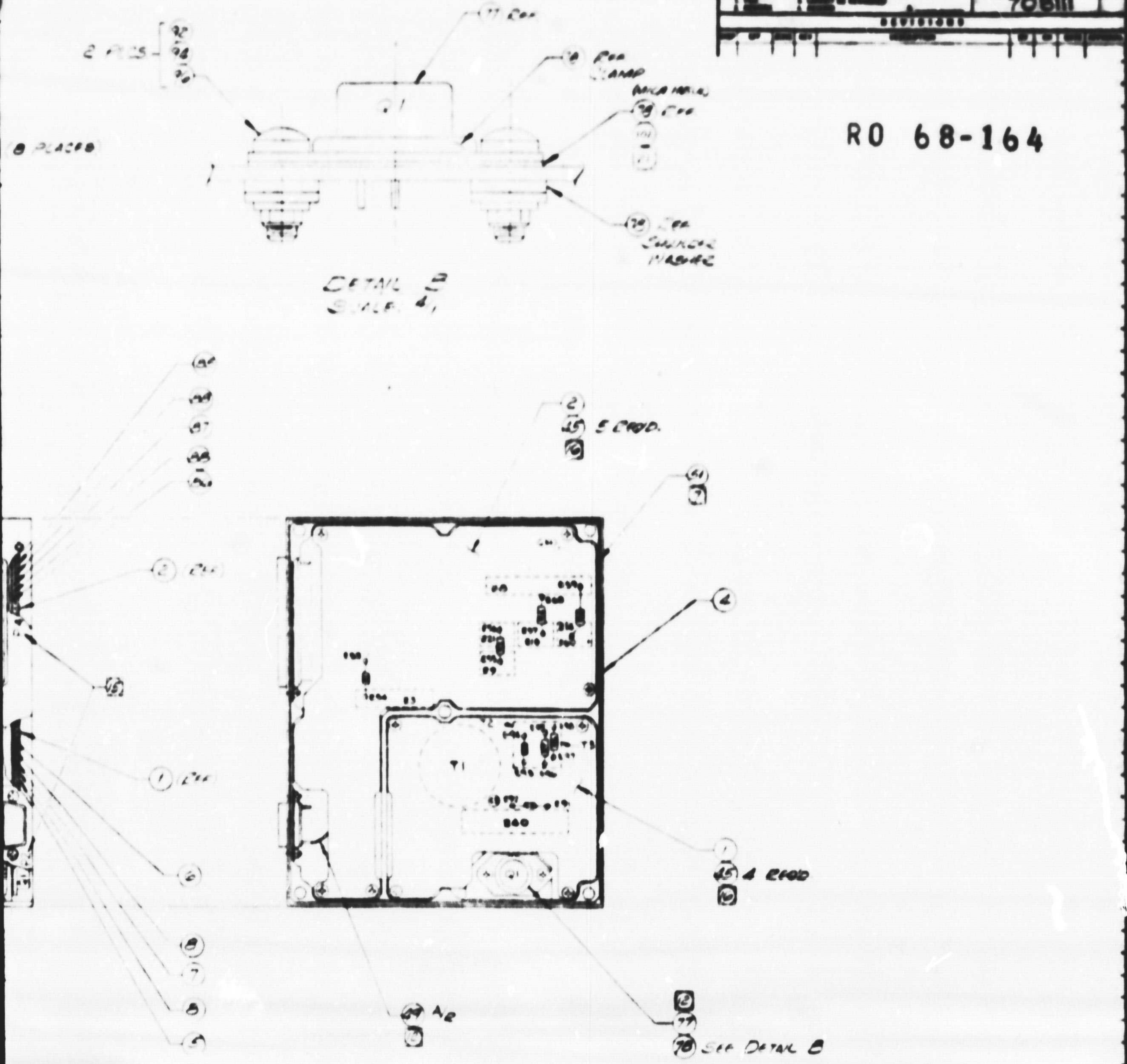

...S I, TYPE II

...SSI, TYPE III.

...LIST OF MATERIAL.

...E I.

...PE I, CURE I, @ 170°F, 1 HOUR.

...°F.

...DING ITEM 54.

...ML SPEC S40149, TYPE II.

...R ML SPEC S40149, TYPE I.

...R ML SPEC S40149, TYPE I.

SEE SEPARATE LIST OF MATERIALS

LIST OF MATERIALS

MARSHALL LABORATORIES

ASSY-POWER SUPPLY & LOGIC, TRIAXIAL SEARCH COIL MAGN. (OGO-F-22)

F 13126 708111

APPLICATION

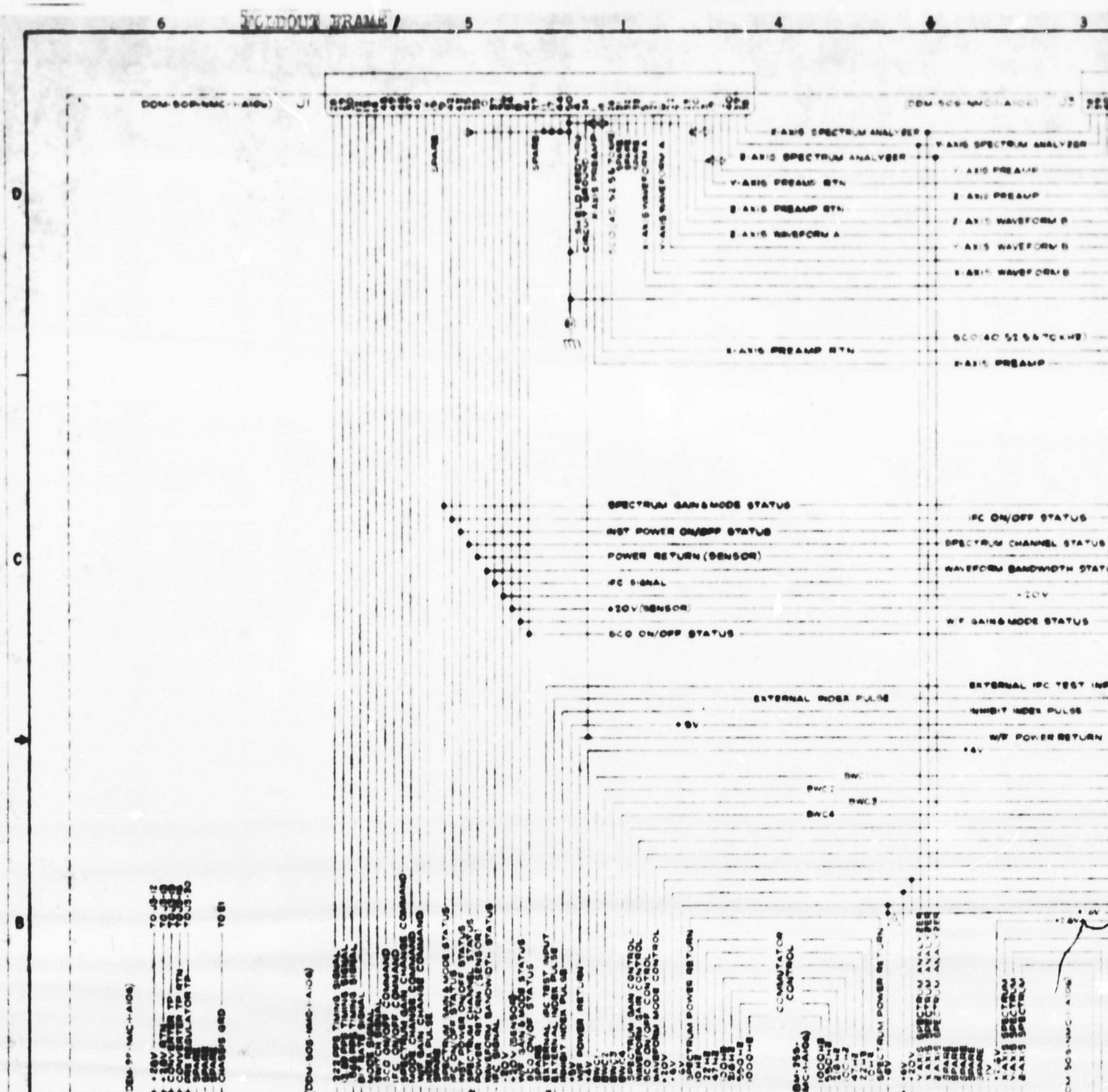
FOLDOUT FRAME
J1
X-AXIS SPECTRUM ANALYZER
Y-AXIS SPECTRUM ANALYZER
Z-AXIS SPECTRUM ANALYZER
Y-AXIS PREAMP RTN
Y-AXIS PREAMP
Z-AXIS PREAMP
Z-AXIS PREAMP RTN
Z-AXIS WAVEFORM A
Z-AXIS WAVEFORM B
Y-AXIS WAVEFORM B
X-AXIS WAVEFORM B
X-AXIS PREAMP RTN
X-AXIS PREAMP
SPECTRUM GAIN & MODE STATUS
INST POWER ON/OFF STATUS
POWER RETURN (SENSOR)
IPC SIGNAL
+20V (SENSOR)
SCO ON/OFF STATUS
IPC ON/OFF STATUS
SPECTRUM CHANNEL STATUS
WAVEFORM BANDWIDTH STATUS
+20V
W/F GAIN & MODE STATUS
EXTERNAL INDEX PULSE
INHIBIT INDEX PULSE
W/F POWER RETURN
+6V
BWC1
BWC2
BWC3
BWC4
COMMUTATOR CONTROL
J7
P7 (DBM-9S-NMC-1-A106)
J2 (DBM-9P-NMC-1-A106)
P2
CHASSIS GRD
J4
P4 (DBM-50P-NMC-1-A106)
POWER SUPPLY & LOGIC
708111-101
FOR SCHEMATIC
SEE 708103
J6
SPECTRUM
FOR SCHEMATIC
J5
6. ▷ INDICATES SHIELDED WIRE (GROUNDED SHIELD).
5. ◊ INDICATES SHIELDED WIRE (FLOATING SHIELD).
4. ⏚ INDICATES CHASSIS GROUND.
3. FOR TEST SPEC SEE 946764.
2. FOR WIRING LIST SEE 708120.
1. FOR ASSEMBLY DWG SEE 708118-101.
NOTES: UNLESS OTHERWISE SPECIFIED

FOLDOUT FRAME 2

RO 68-164

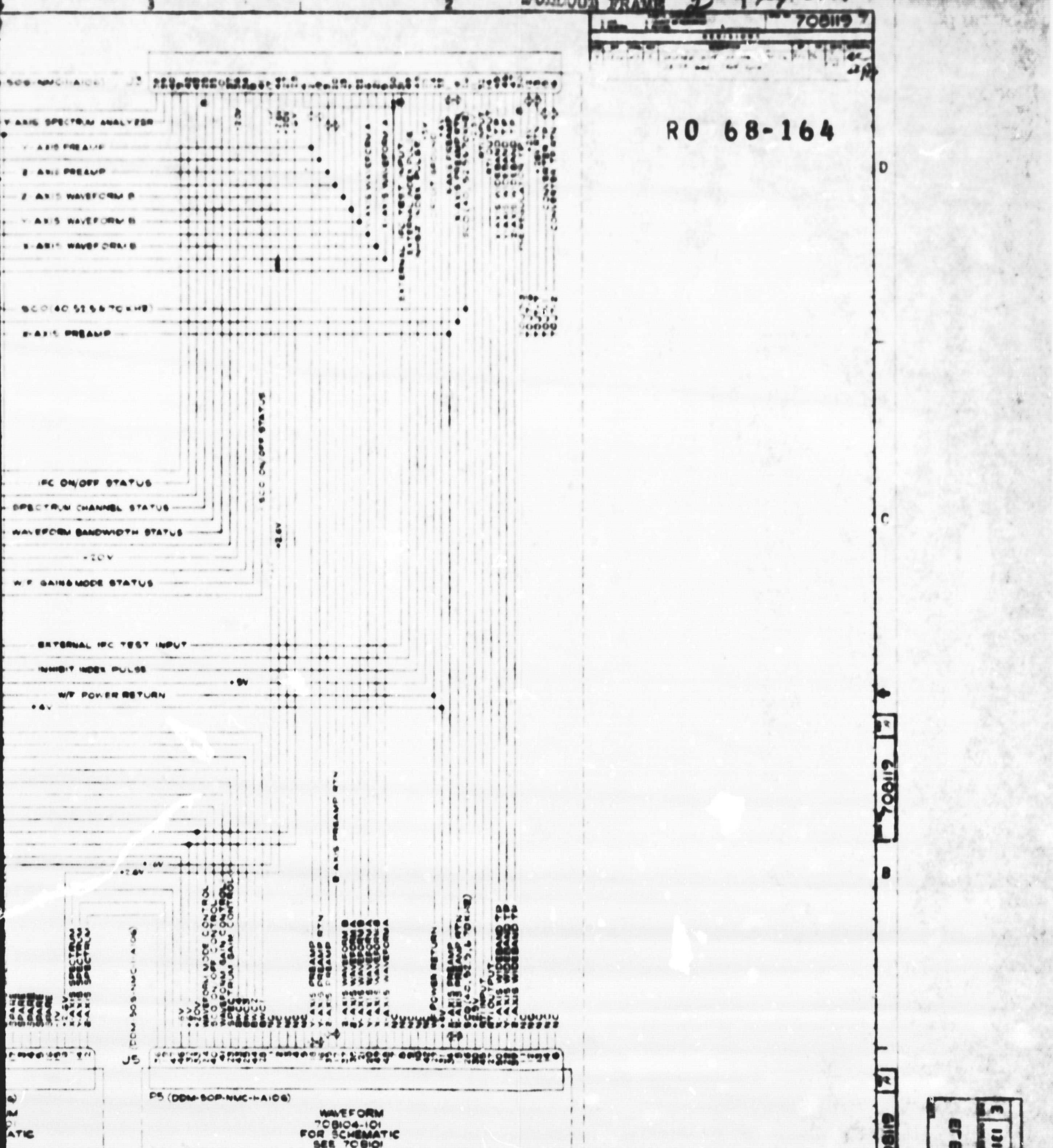

18

3.0 SPACECRAFT INTERFACES

3.1 Mechanical Interfaces

The characteristics of all mechanical interfaces are depicted on figures which are part of the preceding text. These include Figure 4, the thermal schematic; Figure 6, the sensor preamplifier envelope drawing; Figure 22, the main electronic assembly envelope drawing.

3.2 Electrical Interfaces

The following subparagraphs include figures showing the schematic of each instrument spacecraft interface. All grounds shown are signal (telemetry) ground.

3.2.1 Primary Power Interface

Figure 37 shows the schematic of the interface presented to the +28 VDC primary power lines. As indicated, the series regulator receives the +28 VDC. An auxiliary supply from a winding of the power transformer used to increase the efficiency of the regulator driver transistors. The +28 VDC return is isolated from signal (telemetry) ground and from chasis ground.

3.2.2 Synchronization Signal Interface

Figure 38 shows the schematic of the interface presented to the spacecraft 2461 Hz sync signal. The three wire input is applied to the primary of an isolation transformer. This primary is completely isolated from all other circuitry within the instrument. The secondary outputs of the transformer are applied to a complementary transistor amplifier through suitable isolation networks. The output of this amplifier is applied to the converter for synchronization. The +22 VDC and +22 VDC return are obtained from the primary power interface circuit.

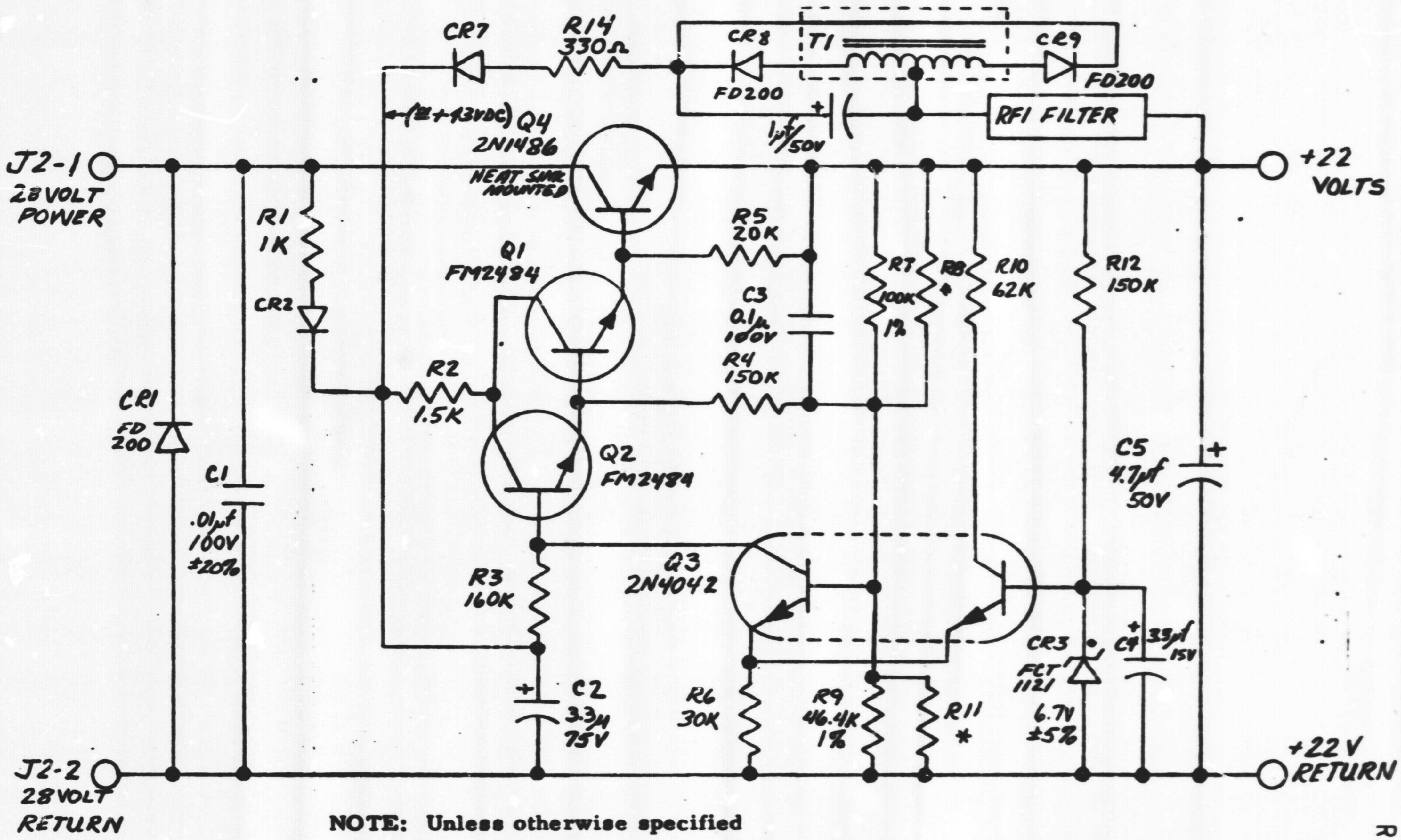

NOTE: Unless otherwise specified

1. All diodes SP30265
2. All resistances in ohms ± 5%, 1/8 watt.
3. All capacitances in microfarads ± 10%
4. T1 shown is part of the converter transformer
5. All 1% resistors are RN55C, 1/10 watt
6. All resistors marked "*" are select values.

Figure 37
Primary Power Interface

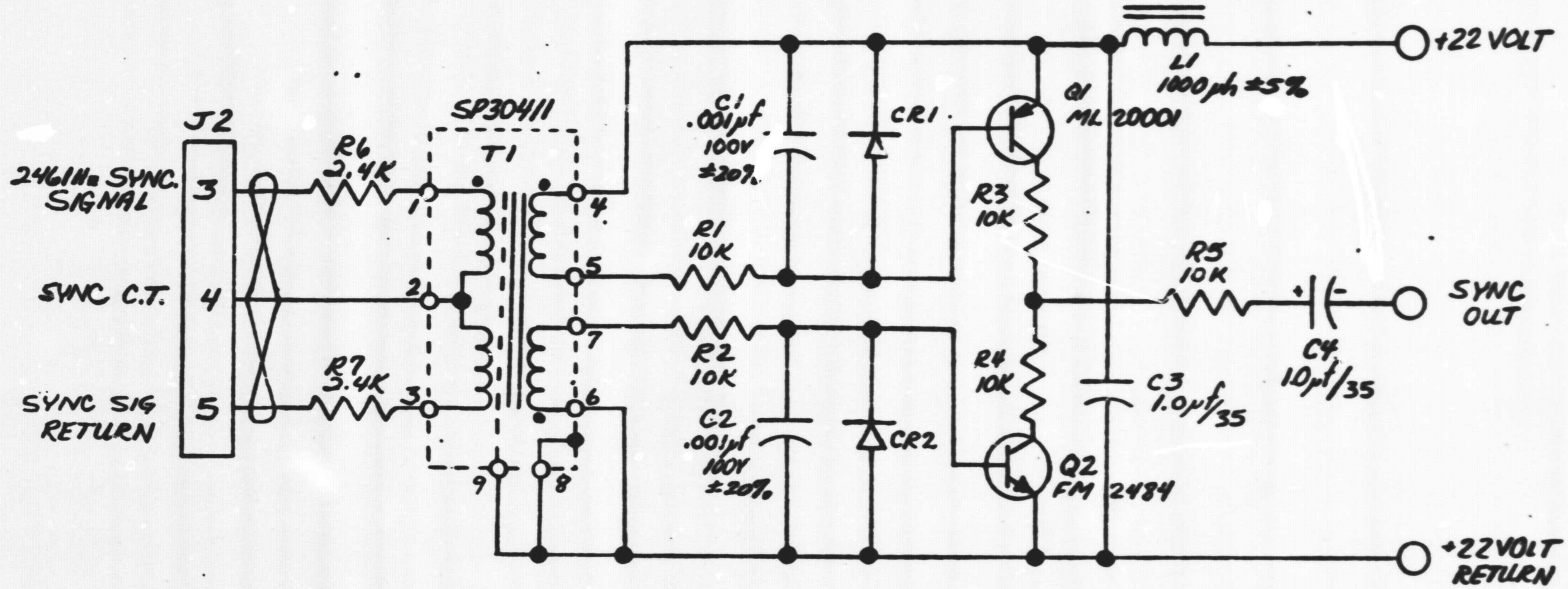

NOTE: Unless otherwise specified

1. All resistances in ohms ± 5%, 1/8 w.
2. All diodes SP30265
3. T1 windings 1-2, 2-3, 4-5 & 6-7 contain equal number of turns
4. All capacitances in microfarads ± 10%.

Figure 38

SYNC SIGNAL INTERFACE

3.2.3 Index Pulse Interface

Figure 39 shows the schematic of the index pulse interface. As indicated, the index pulse is applied through an isolation and noise rejection network into the trigger stage of a monostable multivibrator (latch). The input impedance is greater than 22K ohms.

3.2.4 Timing Signal Interfaces

Figure 39 shows the schematic of the interface circuits for the 222, 13.89, and 0.868 timing signals. As indicated, each signal is applied through an isolation and noise rejection network into the trigger stage of a monostable multivibrator (latch). A resistor to ground yields, for each signal, an input impedance of 20 ± 4 K ohms.

3.2.5 Bit Rate, Mode and Switch Signal Interfaces

Figure 40 shows the schematic of the Bit Rate, Mode, and Switch Signal interfaces. The Bit Rate signal drives two inverter stages. These inverters have threshold levels chosen for decoding this tri-level input signal. The Mode Signal and Switch Signal each drive an inverter stage. All input circuits contain a resistor diode network for noise rejection. The input impedance for each signal is greater than 50 K ohms.

3.2.6 Command Signal Interface

Figure 41 shows the schematic of the interface presented to the five ground impulse command signals. The signals are Waveform Gain Change, Spectrum Gain Change, Mode Change, SCO On - Off and IFC On - Off. Each of the five interface circuits are identical. A resistor-capacitor network at each input affords impedance isolation and noise and relay contact bounce rejection. This network feeds an inverter stage that triggers a monostable multivibrator (latch). The input impedance is greater than 90 K ohms.

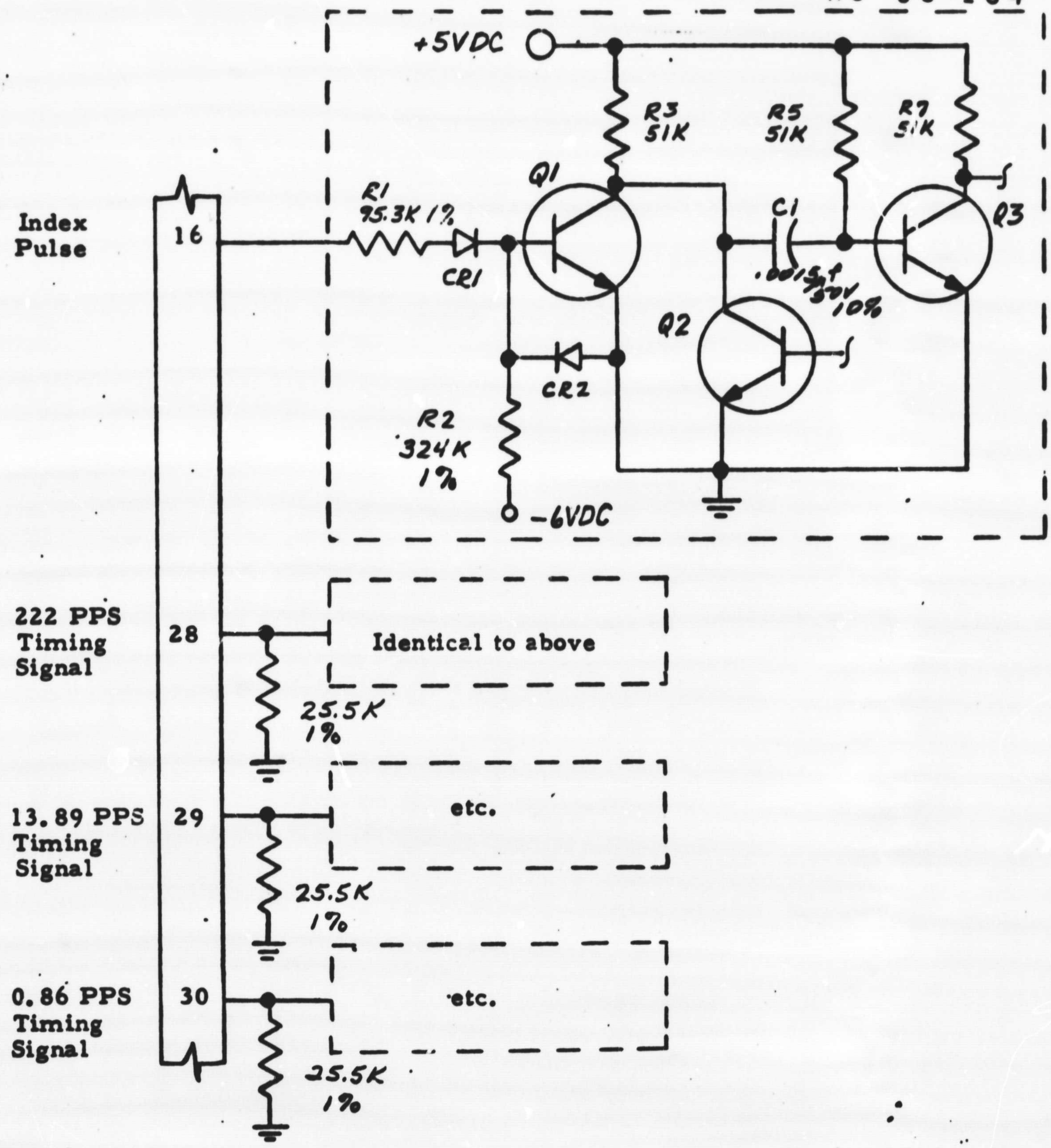

NOTES: Unless otherwise noted

1. Resistors are ± 5% 1/8 w
2. Resisotrs shown as 1% are 1/10 w
3. All Diodes are 5P30265
4. All transistors are FM2484

Figure 39

Index Pulse & Timing Signal Interfaces

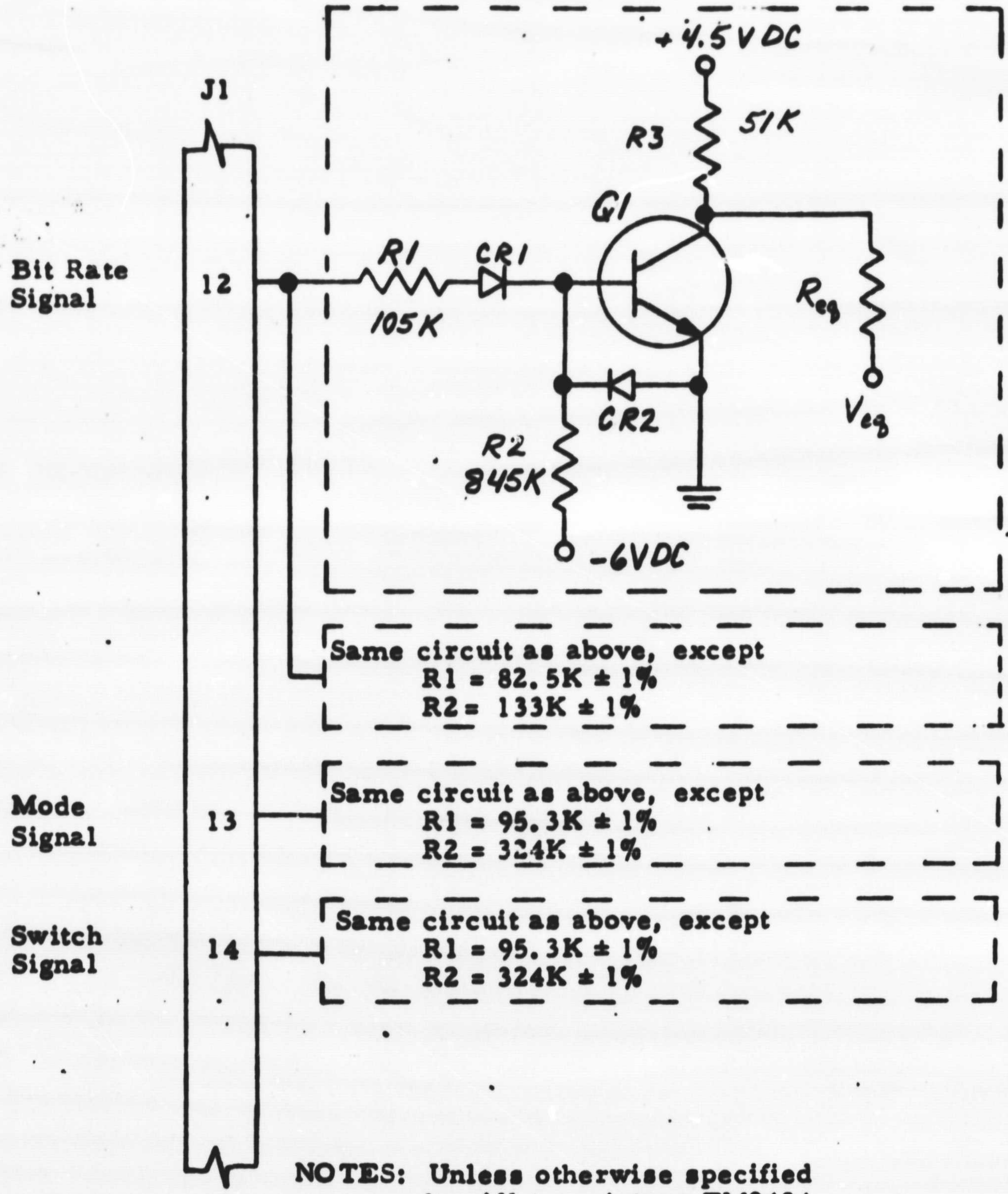

NOTES: Unless otherwise specified
1. All transistors FM2484
2. All diodes SP30265
3. All R1 are type RN55D ± 1% 1/10 watt
4. All R2 are type RN60D ± 1% 1/8 watt
5. All R3 are type RC05 ± 5% 1/8 watt.

Figure 40

Bit Rate, Mode & Switch Signal Interfaces

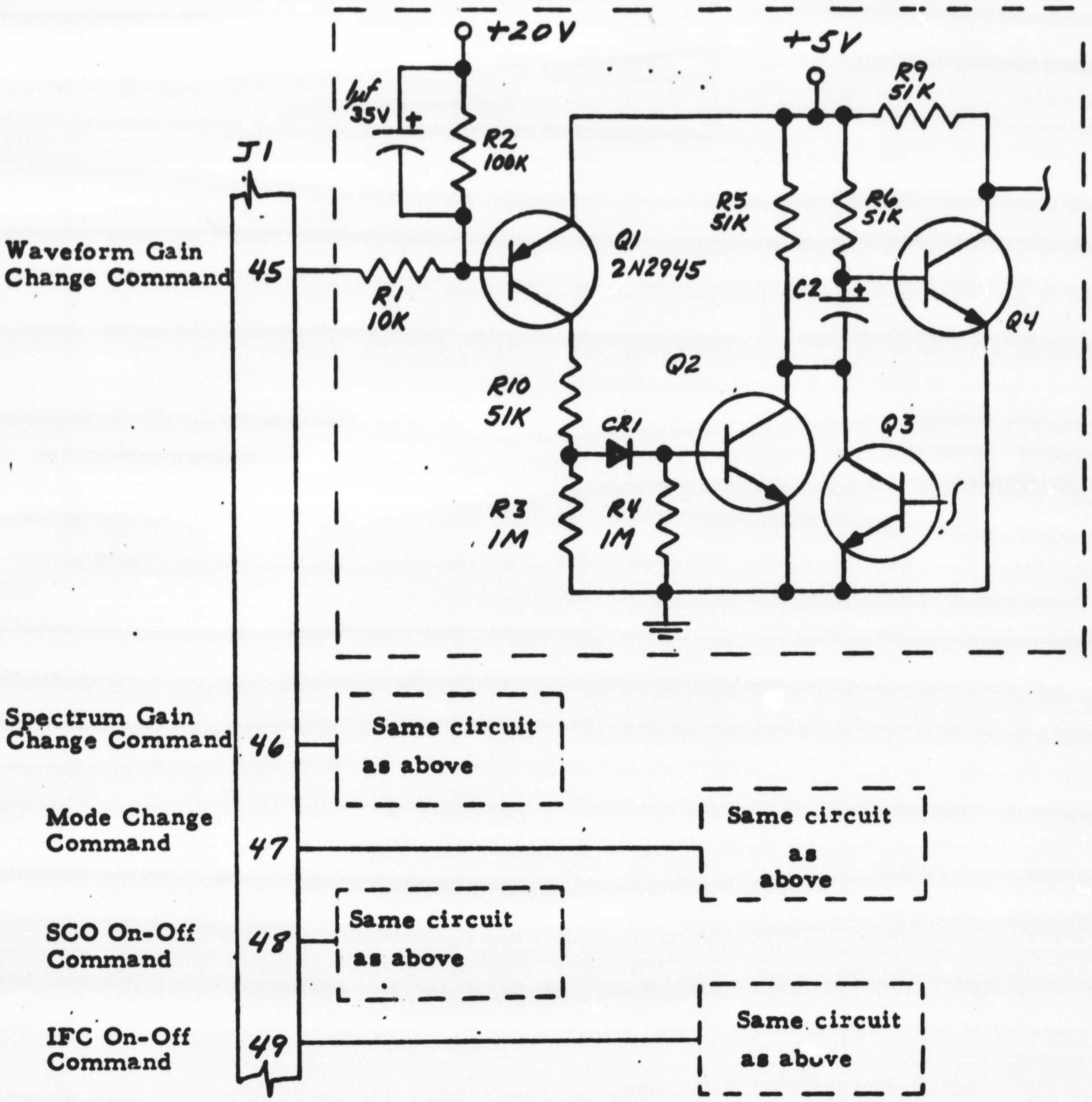

NOTE: Unless otherwise noted

1. All resistors ± 5% 1/8 W
2. All diodes SP30265
3. All capacitors .0015 μf 50V
4. All capacitors ± 10%
5. All transistors FM2484

Figure 41
Command Signal Interface

3.2.7 Waveform Output Interfaces

Figure 42 shows the schematic of the interface circuit for the Waveform A and B output signals. The six output circuits are identical. Each circuit contains a complementary emitter follower output stage driven by a PNP amplifier plus its associated circuitry. Also connected to the output are a feedback network, consisting of R1 and C1, a capacitor C2, which provides the necessary surge current for the ADHA input capacitance and CR4 and CR5 which clamp the outputs to prevent large output excursions below signal ground and above plus 6 volts. The high open loop gain of the amplifier results in a very low dynamic output impedance for this circuit.

3.2.8 Spectrum Analyzer Output Interface

Figure 43 shows the schematic of the interface circuit for the spectrum analyzer output signals. The circuits for the three axes are identical. These output circuits are virtually identical to those used for the waveform outputs (Figure 42). The input signal to this circuit is such that no clamping diodes to ground is required at the output.

3.2.9 SCO Output Interface

Figure 44 shows the schematic of the interface circuit for the SCO output signal. The circuit contains a complementary emitter follower output stage driven by Q1 which is part of a feedback amplifier. Feedback is supplied by R5 and C4. The output is AC coupled through C1. The high open loop gain results in a very low dynamic output impedance for this circuit.

3.2.10 Instrument Status Output Interfaces

Figures 45, 46 & 47 show the schematic of the interface circuits for the Instrument Power, IFC, SCO, Waveform Gain Mode, Spectrum Gain Mode, and Waveform Bandwidth status outputs. The voltage levels of these outputs are listed in paragraph 2.2.6.

3.2.11 External and Inhibit Index Pulse Interfaces

Figure 48 shows the schematic of the Inhibit Index Pulse and External Index Pulse Interfaces. These inputs are presented not to the spacecraft but to the external test equipment at the instrument test connector J3. Inhibit Index pulse requires a closure to signal ground. See also paragraph 2.2.4.1 B and C.

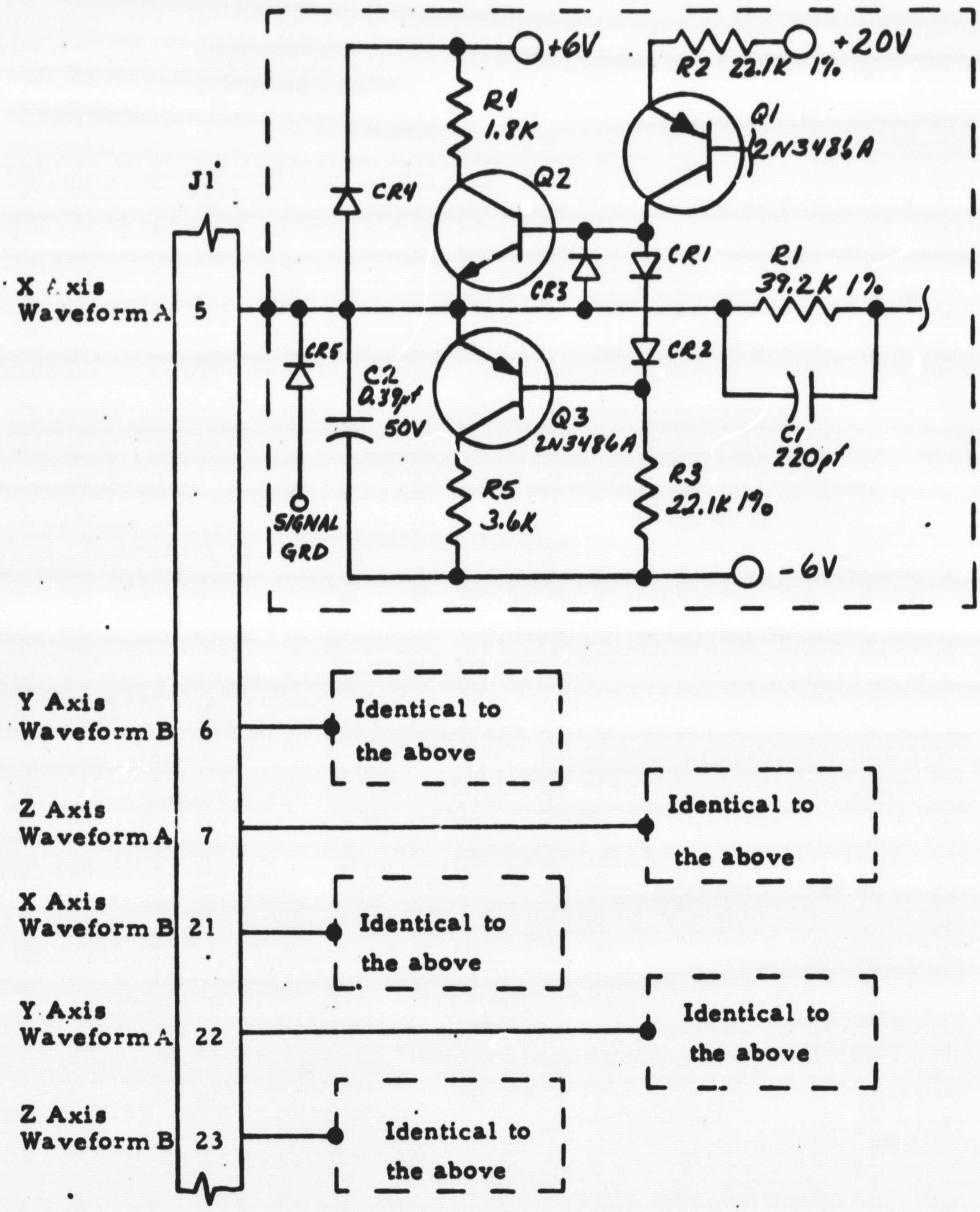

NOTE: unless otherwise noted
1. Capacitances in microfarads ± 10%
2. Resistances in ohms ± 5%, 1/8 watt
3. Diodes SP30265
4. Transistors FM2484
5. 1% Resistors RN55C, 1/8 watt

Figure 42
Waveform Output Interface

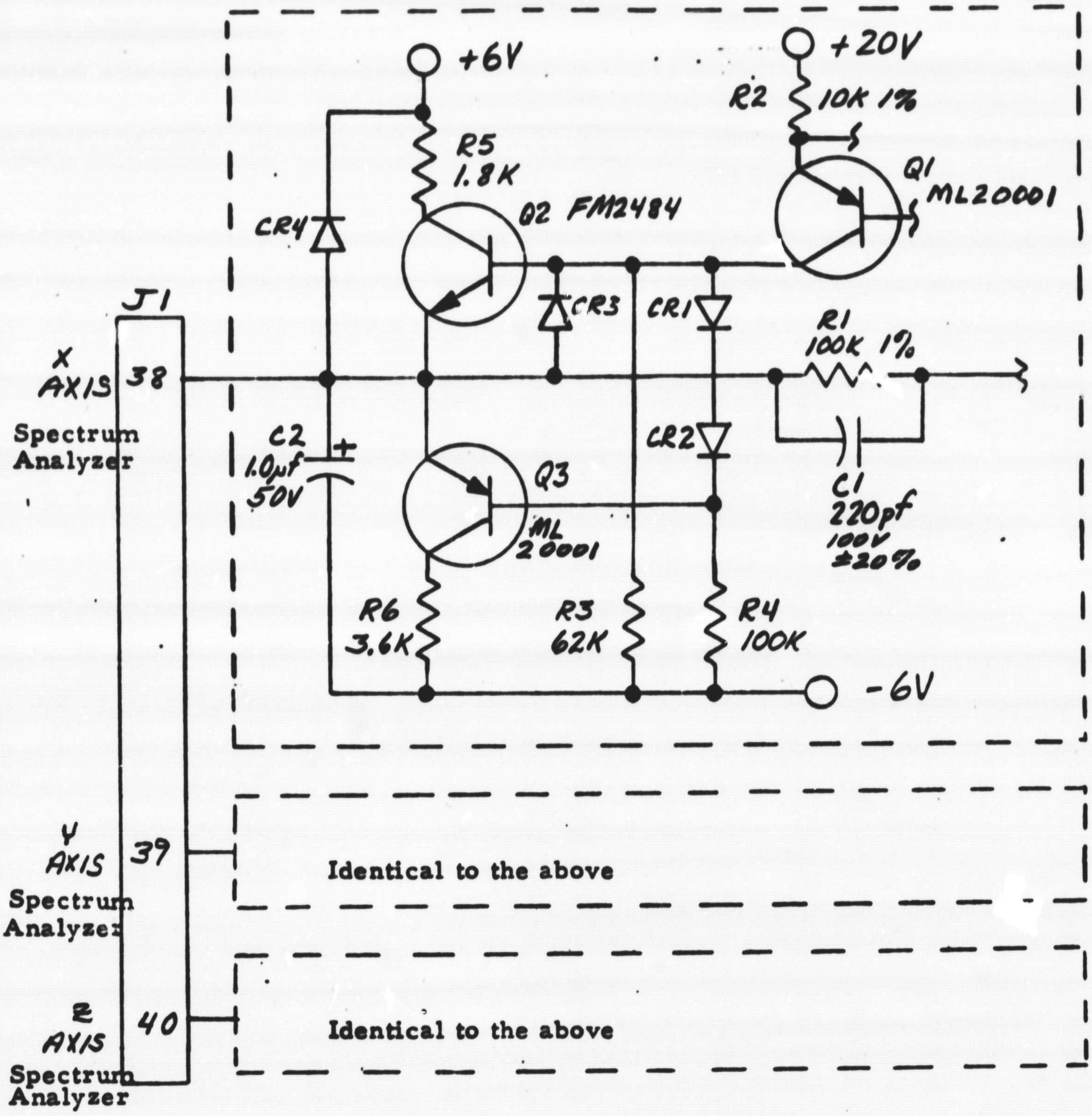

Note: Unless otherwise specified
1. Resistances in ohms ± 5% 1/8 w
2. Capacitances in microfarads ± 10%
3. Diodes are SP30265
r. All 1% resistors are RN55C, 1/10 watt

Figure 43
Spectrum Analyzer Output Interface

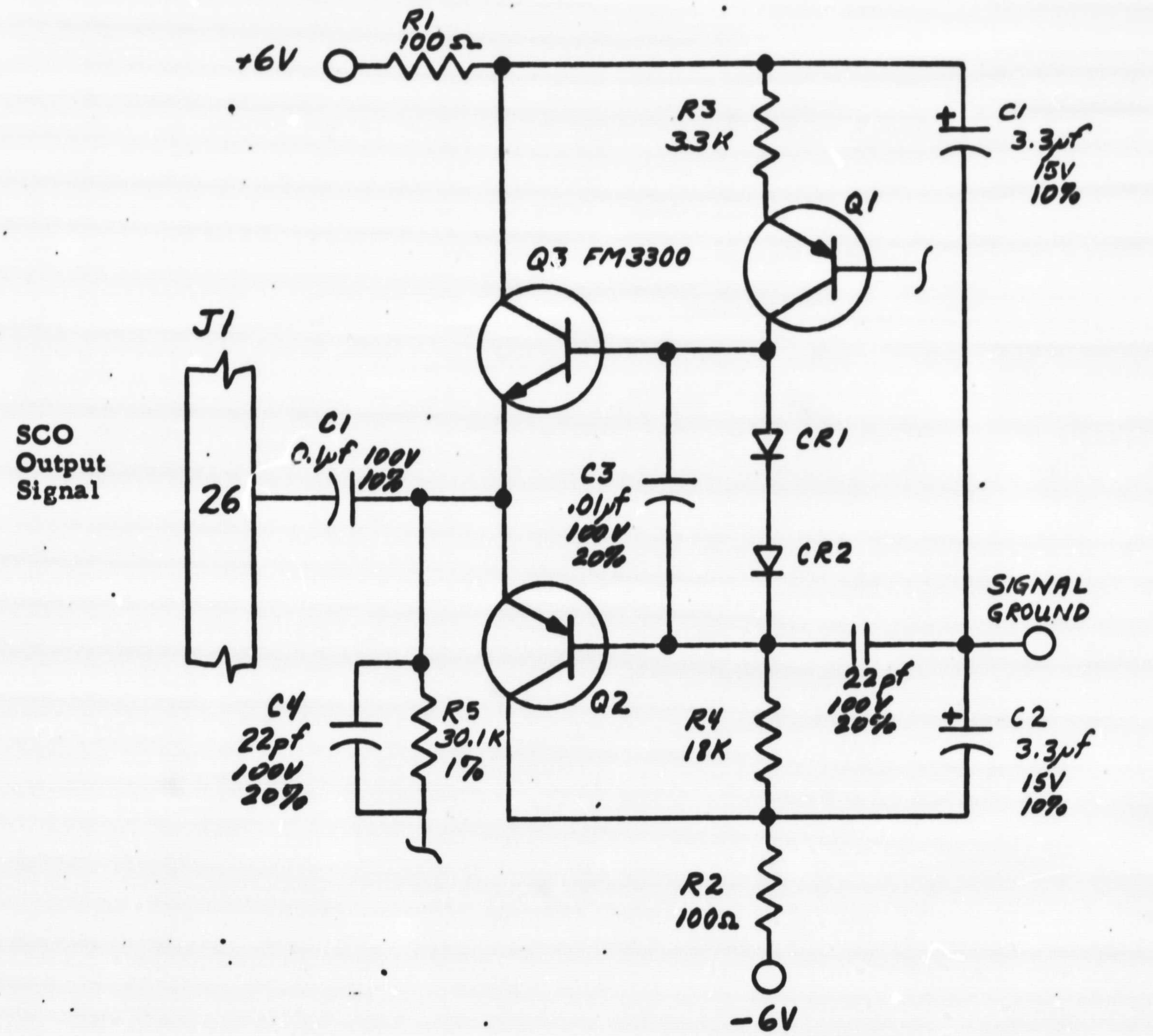

NOTE: Unless otherwise noted
1. All resistors are ± 5% 1/8 w.
2. All transistors are ML20001
3. All diodes are SP30265

Figure 44
SCO Output Interface

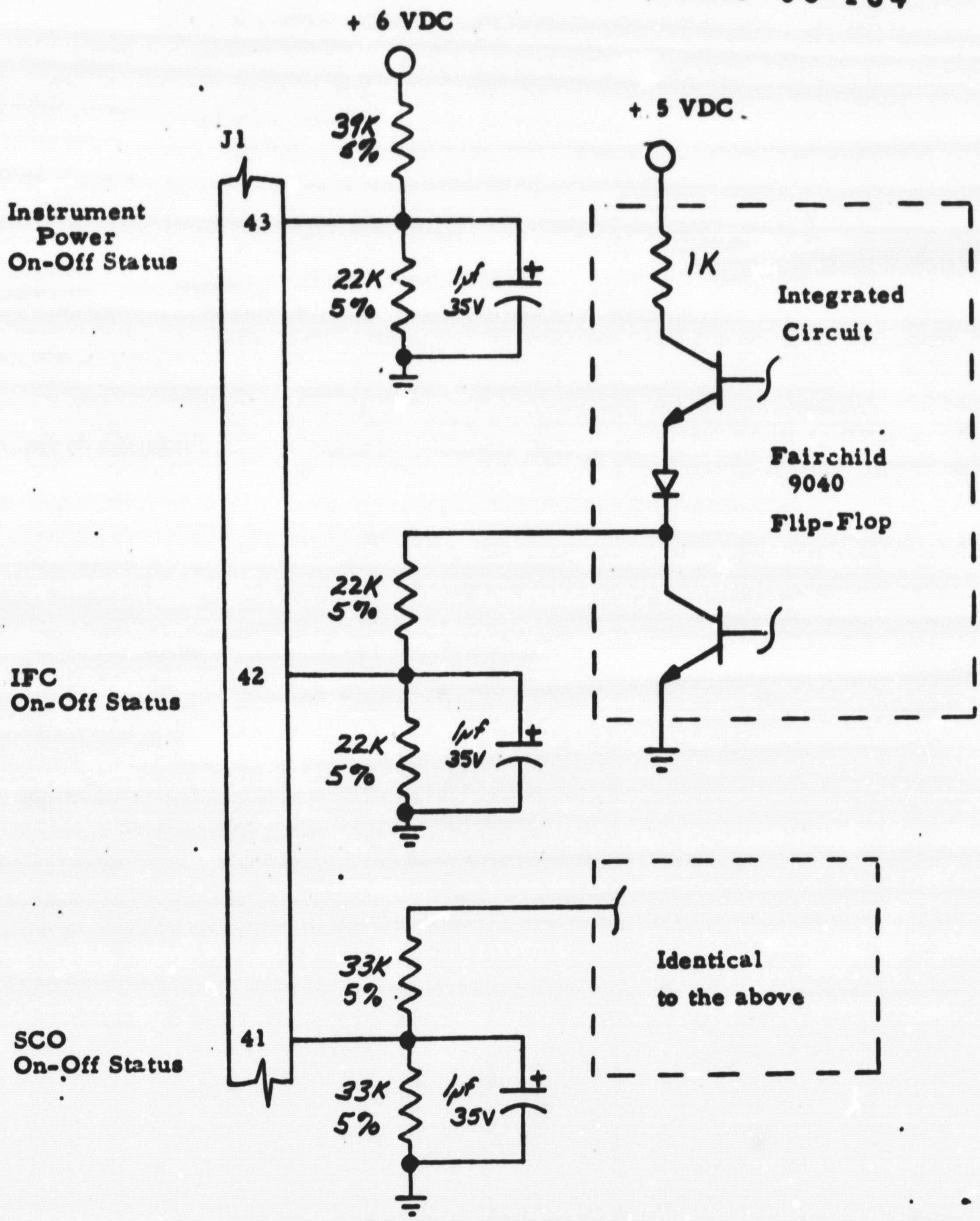

NOTE: All 5% resistors 1/8 watt
All capacitors 10%

Figure 45
Instrument Power, IFC, and SCO Status Interface

90

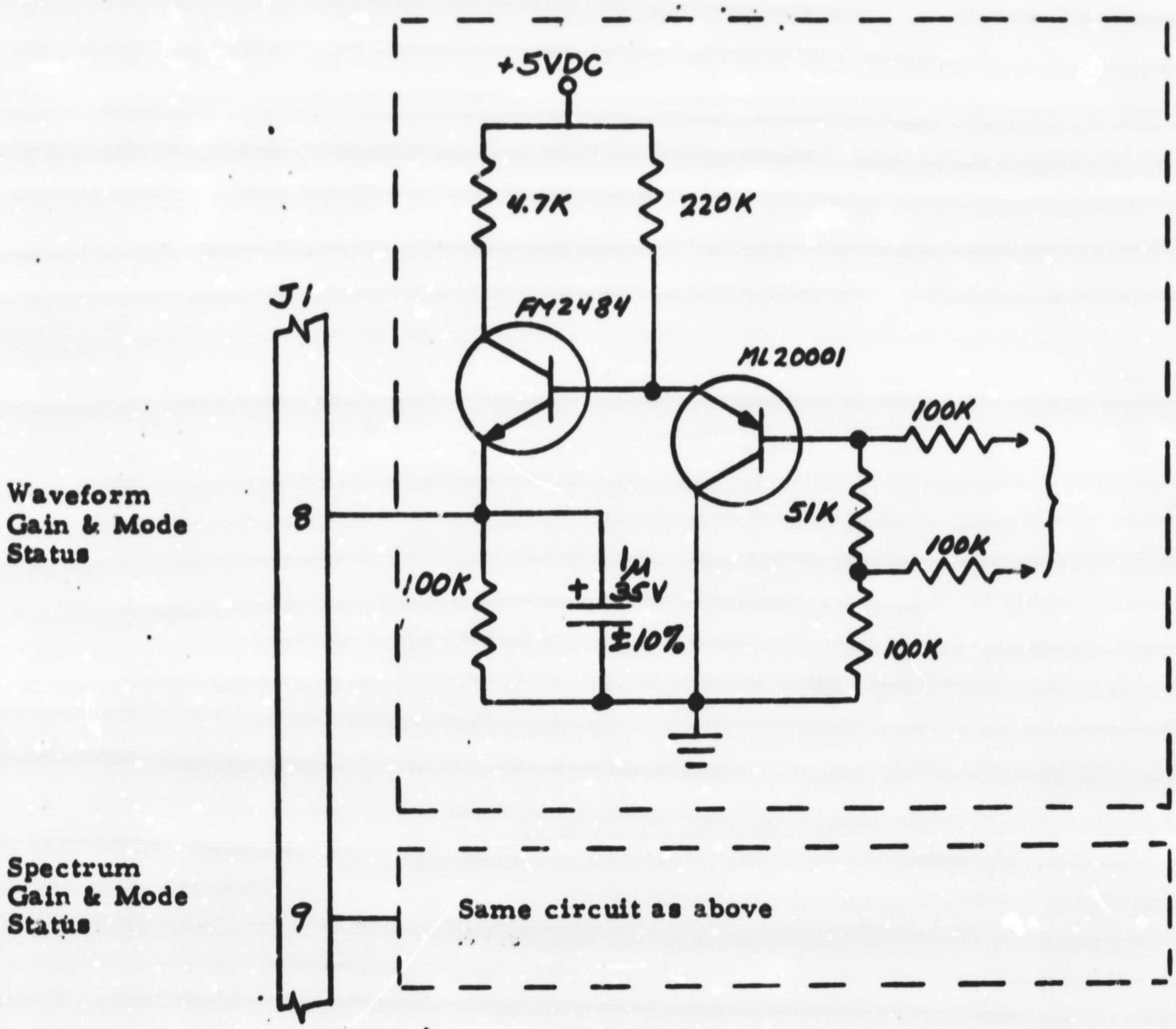

NOTE: Unless otherwise noted
1. All resistors ± 5%, 1/8 watt

Figure 46

Waveform and Spectrum Status Interface

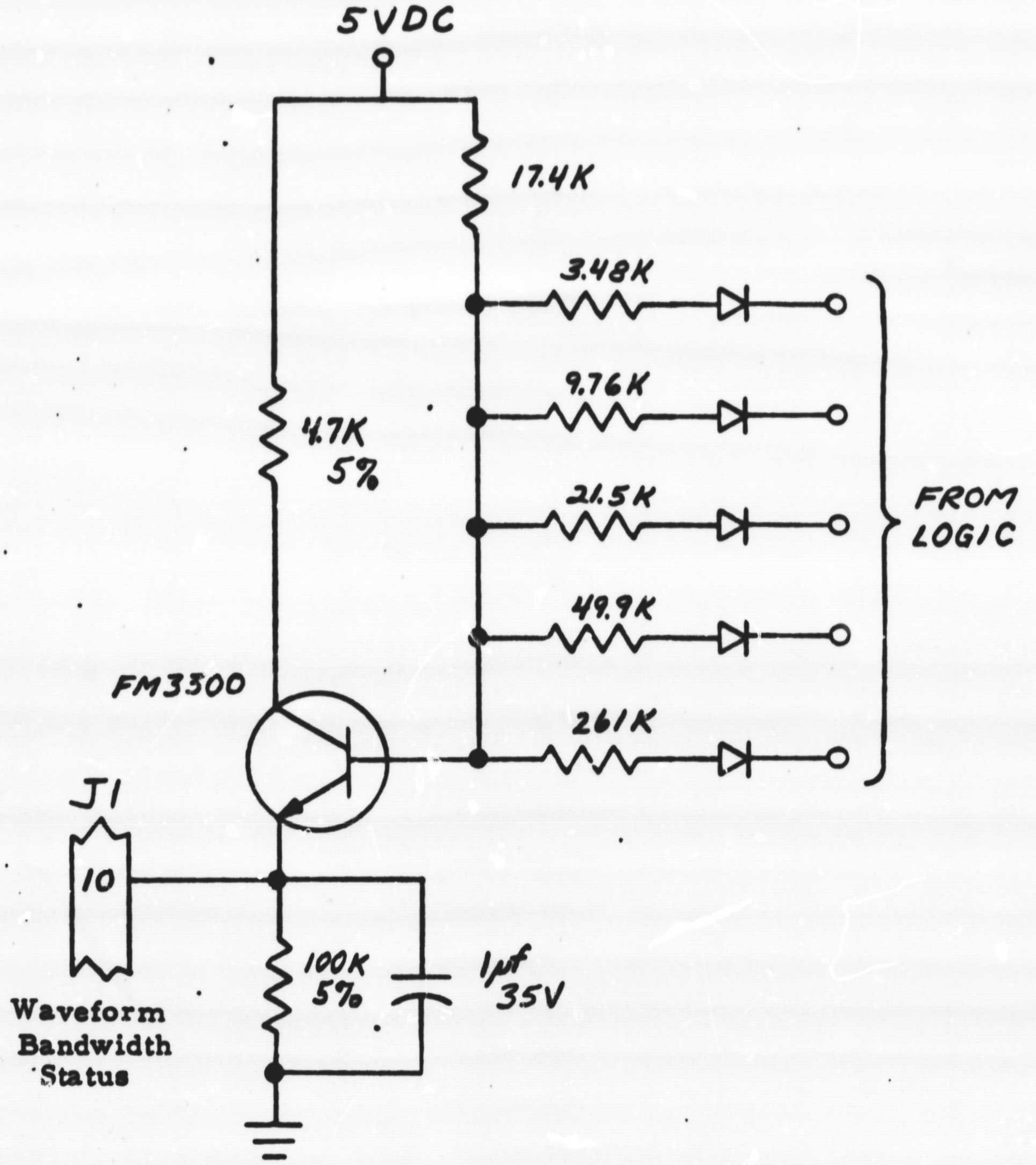

NOTE: Unless otherwise specified

1. All resistors RN55C, ± 1%, 1/10 watt
2. All 5% resistors are 1/8 watt.
3. All diodes SP30265.

Figure 47

Waveform Bandwidth Status Interface

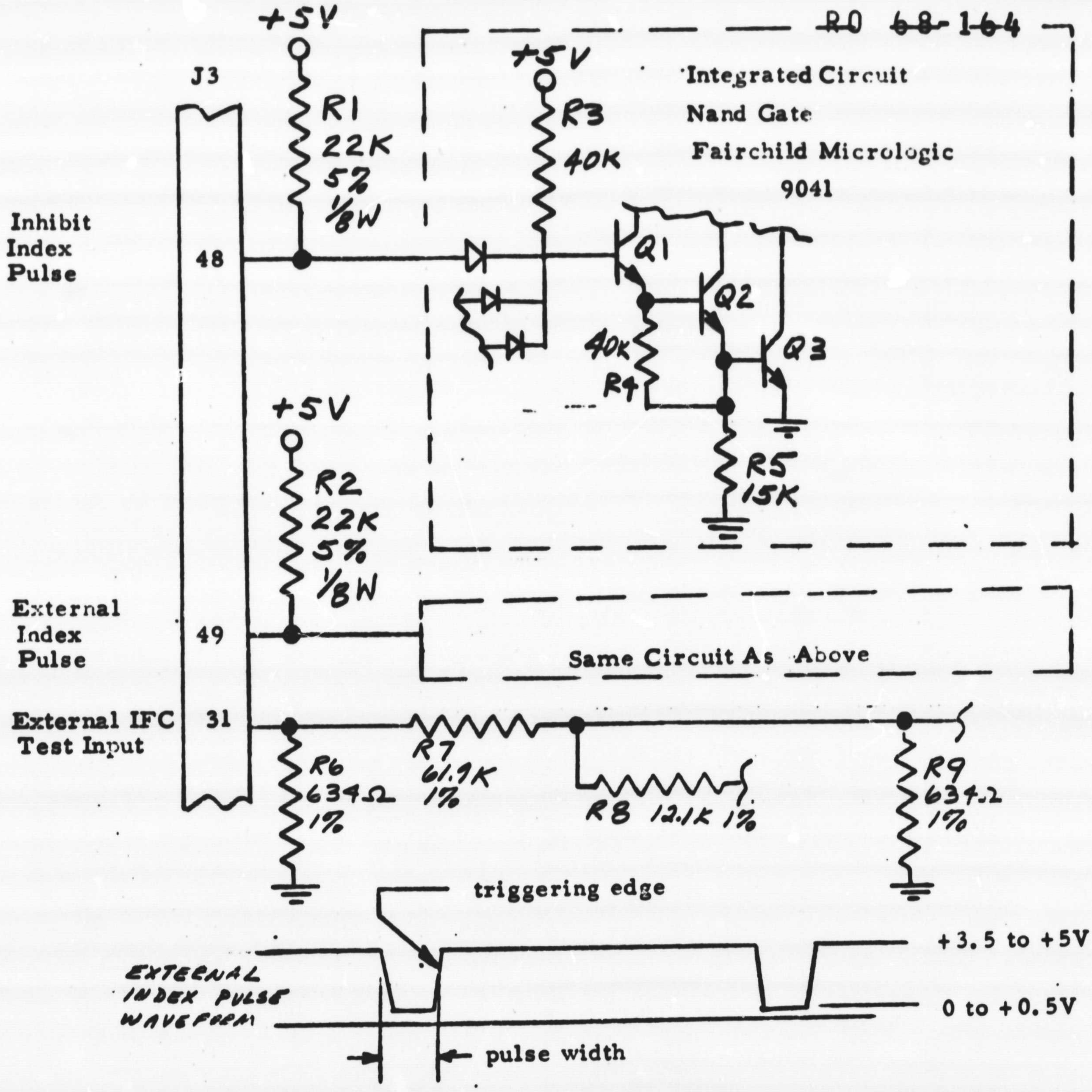

Notes:

Rise and fall times shall be less than 10 microseconds.
Minimum pulse width shall be 140 microseconds.
Pulse repitition frequency as required.
All 1% resistors are RN55C, 1/10 watt.

Figure 48

External and Inhibit Index Pulse Interfaces, External IFC Test Input and External Index Pulse Waveform.

4.0 BENCH TEST EQUIPMENT

The purpose of the OGO-F Bench Test Equipment (BTE) is to simulate the spacecraft interface signals and to monitor the functioning of the OGO-F Search Coil Magnetometer instrument. The BTE contains provisions for convenient use of auxiliary test equipment to enable complete calibration of the instrument. The BTE is composed of a Simulator Unit, a Monitor Unit, and three Cables for connecting these units to the instrument. Figure 49 shows the BTE connected to the instrument. During instrument test when the instrument is disconnected from the spacecraft, both of the units are required. During spacecraft or spacecraft simulator integration tests, only the Monitor Unit is required.

4.1 Mechanical Description

Figures 50 and 51 show front and rear views of the Simulator Unit. Figures 52 and 53 show front and rear views of the Monitor Unit. Figures 54, 55 and 56 show the interconnecting cables. Both units contain chassis mounted on standard 19 inch panels. The panels contain controls and test points. All connectors are mounted on the rear of the chassis. A major portion of each units' circuitry is mounted on circuit boards which plug into chassis mounted cages. The entire BTE was fabricated utilizing highest quality commercial construction.

4.2 Electrical Description

All of the electrical functions provided by the BTE are described in the following paragraphs. A schematic of the Simulator Unit is shown in Figure 57 and a schematic of the Monitor Unit is shown in Figure 58.

4.2.1 Simulator Unit

The Simulator Unit contains internal power supplies, a +28 volt power supply, a 2461 H_z sync generator, a timing signal generator, an index pulse generator, a telemetry status generator and a command signal generator.

4.2.1.1 Internal Power and Instrument Power

Figure 59 shows a block diagram of the Simulator Unit power supplies. As indicated, fused AC power is used to energize the internal +4 and ± 15V dc power supplies. The BTE Power on-off switch with indicator light and test points for the internal voltage are front panel mounted. The 28V power supply circuitry contains: an instrument power on-off switch with indicator light, a voltage level control used to set the output variable from zero to +50V dc (+28V dc nominal), a current limit control, two output voltage test points, and a voltage/current meter with a meter scale select switch. The current limit is set by shorting

94

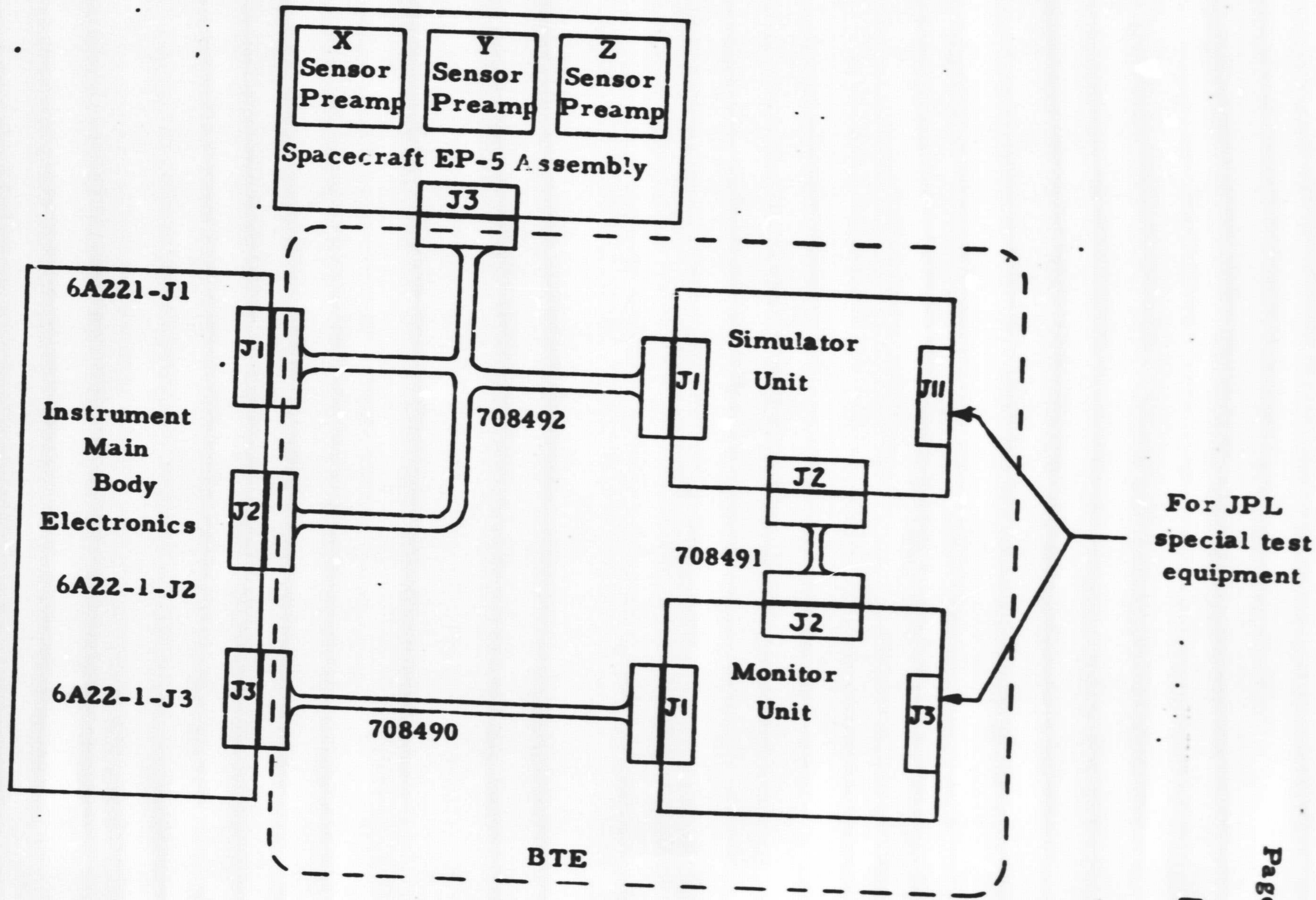

Figure 49
BTE Instrument Interconnect
Schematic

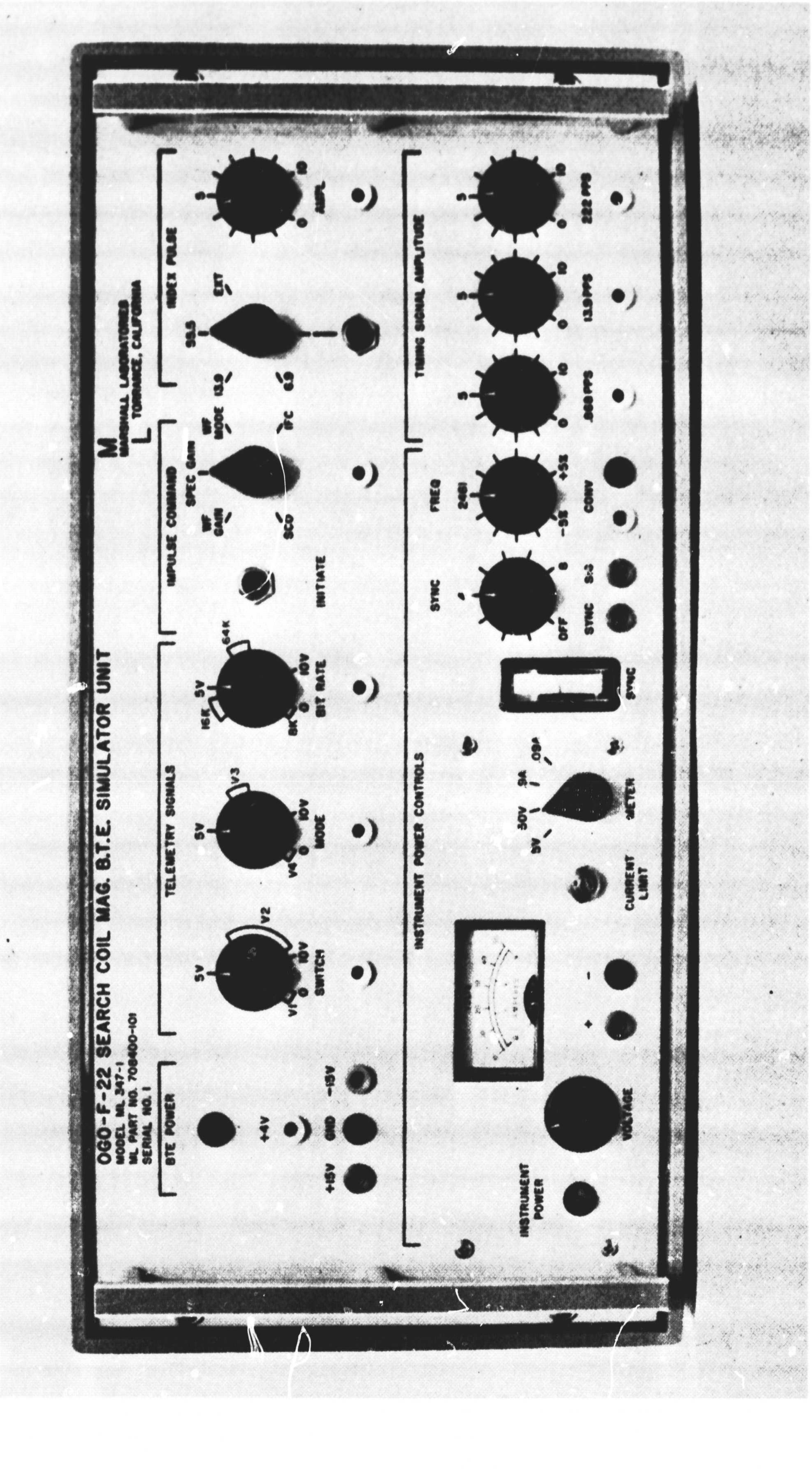

FIGURE 50. SIMULATOR UNIT, FRONT VIEW

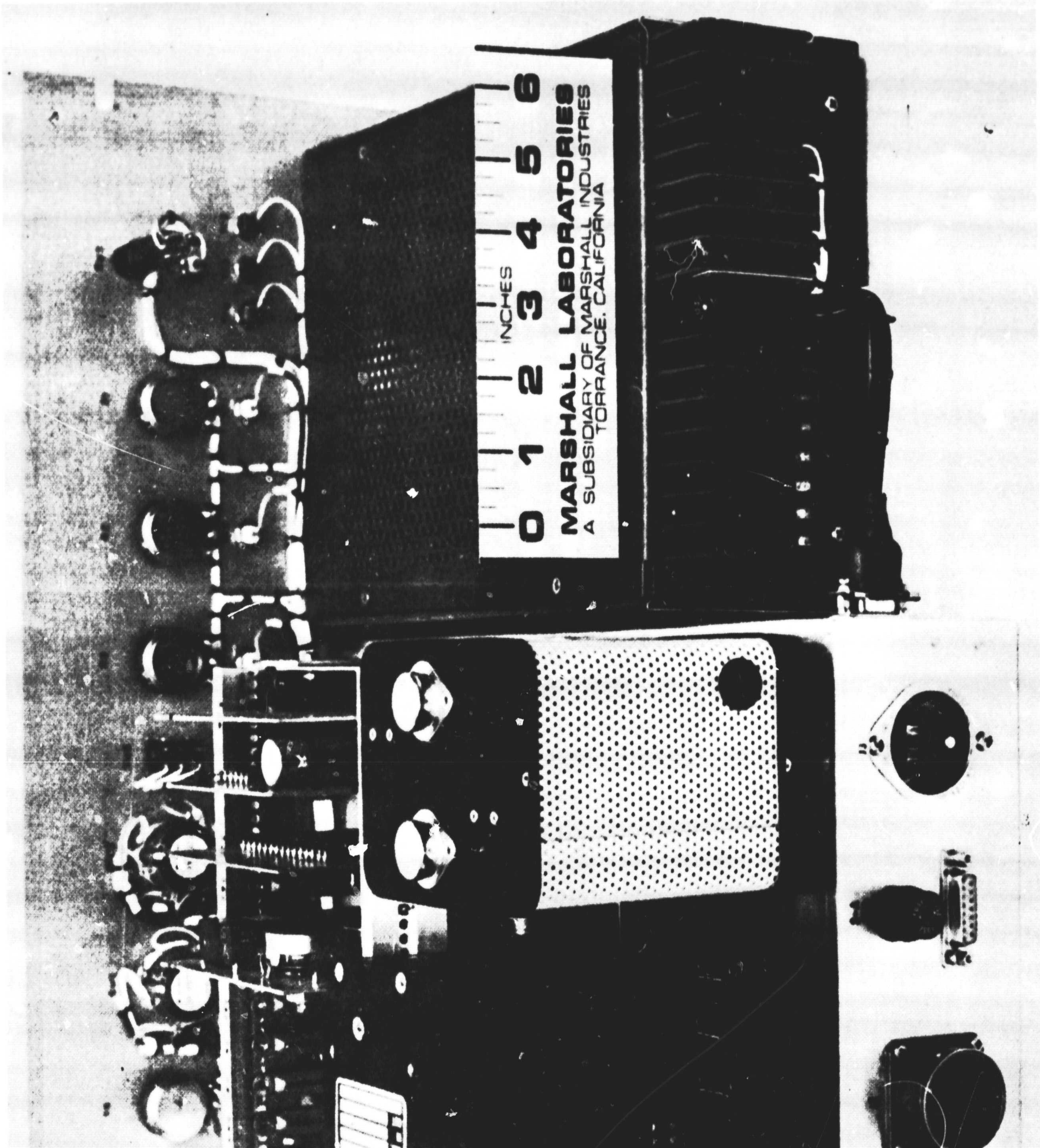

FIGURE 51. SIMULATOR UNIT, REAR VIEW

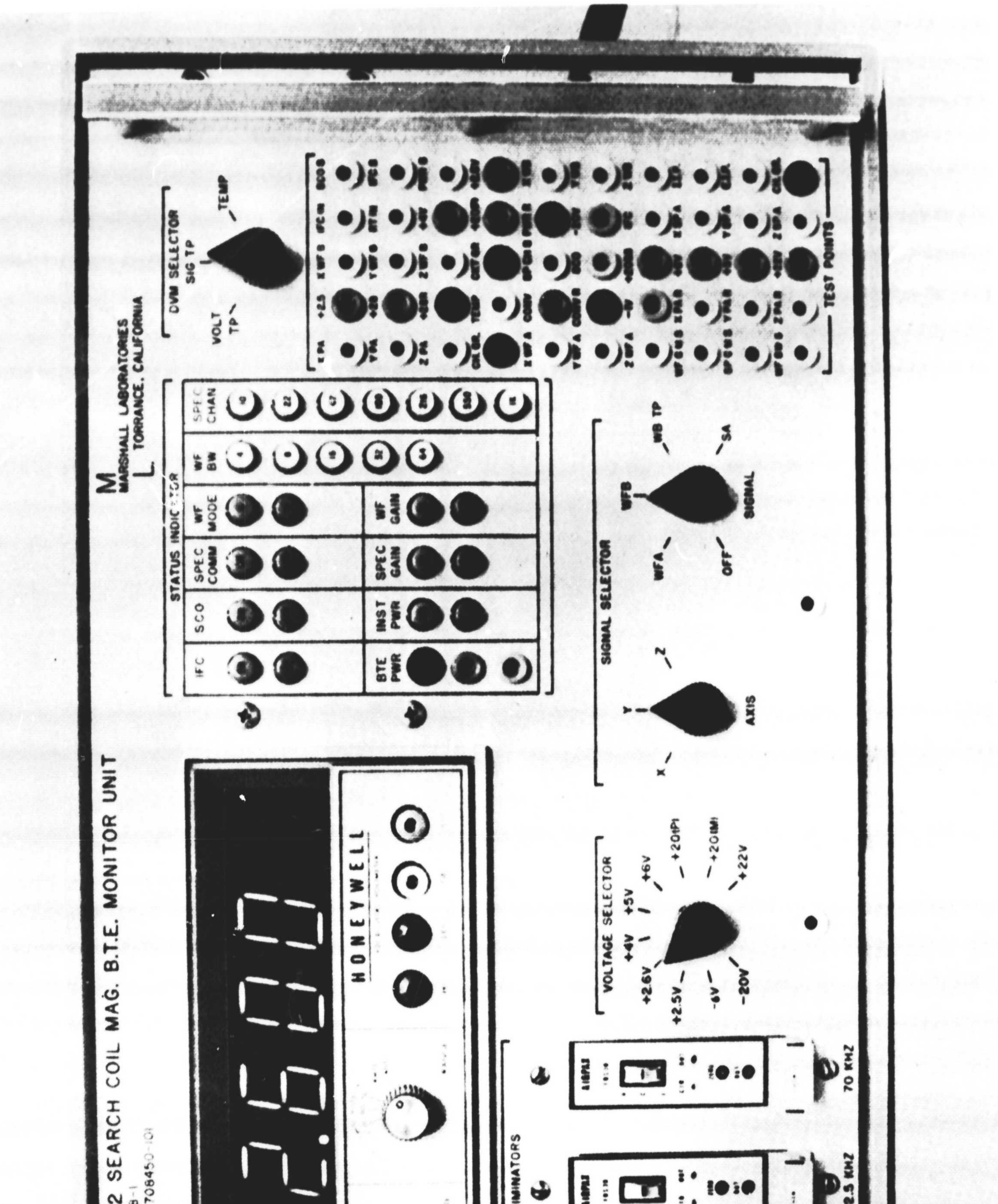

FIGURE 52. MONITOR UNIT, FRONT VIEW

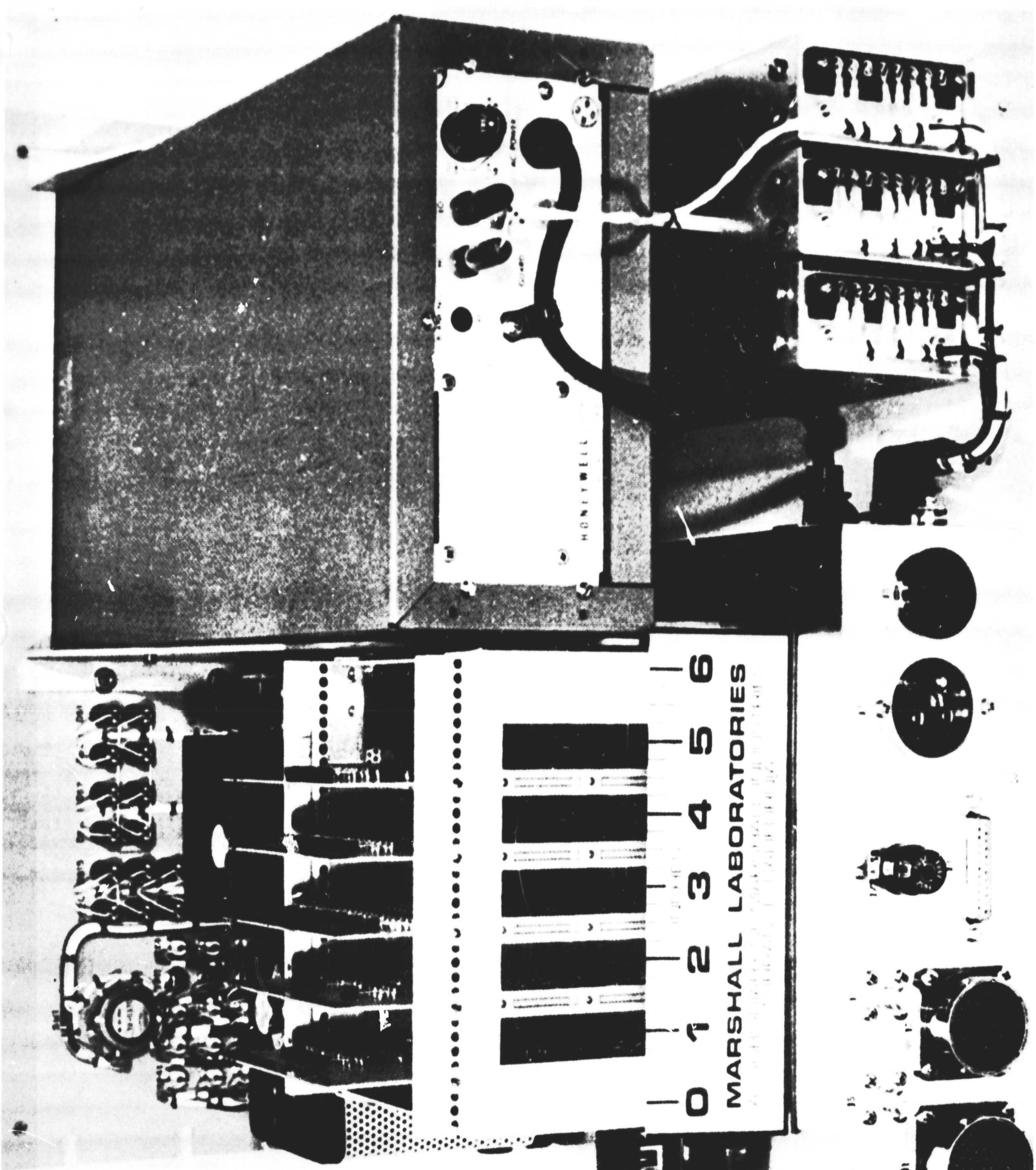

FIGURE 53. MONITOR UNIT, REAR VIEW

FOLDOUT FRAME

FOLDOUT FRAME 1

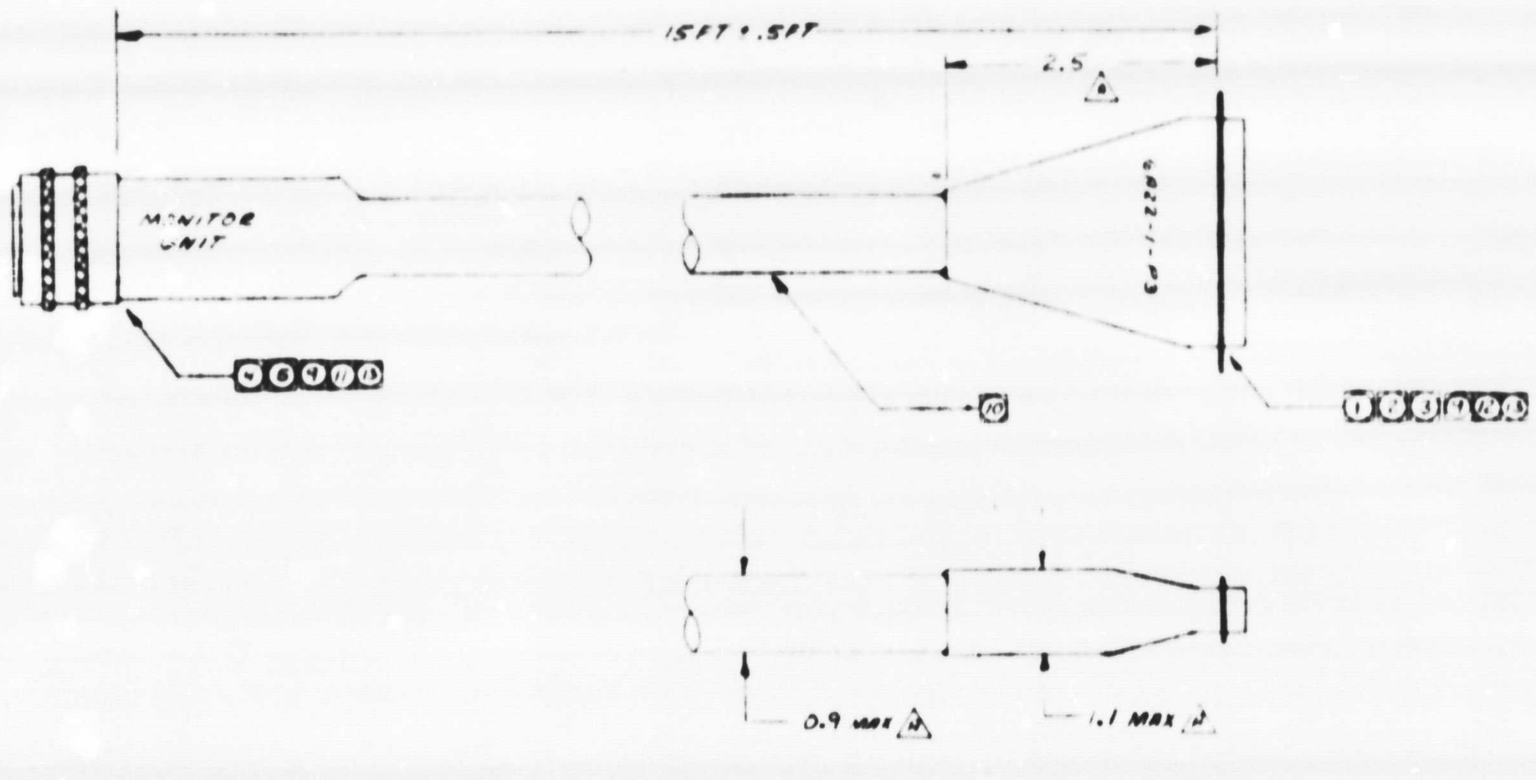

15. SOLDER PER MIL SPEC 540126
14. PRE-POT CONNECTORS WITH PRC 1201Q PER 540093 CLASS III, TYPE II
13. IDENTIFICATION TO BE 1/8 INCH MIN. WHITE LETTERS, HOT STAMP AND FILLED.
12. CONNECTOR TO BE IDENTIFIED AS "OGO - F SEARCH COIL", FAR SIDE.
11. CABLE TO BE IDENTIFIED AS "70B490", FAR SIDE.
10. CABLE TO BE COVERED PER MIL-R-6855, NEOPRENE TYPE II SR60 1/16 WALL.
9. CONNECTORS TO BE MOLDED WITH: PR1520 - POLYURETHANE COMPOUND - PRODUCTS RESEARCH OR EQUIVALENT
8. THE WIRE INDICATED IN TABLE 1 OR EQUIVALENT SHALL BE USED.
7. WRAP WIRE WITH PVC TAPE .004 THK PER MIL-I-631.
6. CABLE TO BE CONTRA-HELICALLY LAID.
5. CONNECTOR TO BE IDENTIFIED AS "MONITOR UNIT."
4. CONNECTOR: BENDIX # PT06A-24-61S
3. NO MAGNETIC MATERIAL TO BE USED AT THIS END OF THE CABLE.
2. CONNECTOR TO BE IDENTIFIED AS "6A22-1-P3."
1. CONNECTOR: CANNON # DDM-50P-NMC-1-A106

NOTES: UNLESS OTHERWISE SPECIFIED

PARTS DISPOSITION	DWG NO.	REV
1. USE 2. REWORK 3. CANNOT BE REWORKED 4. RECORD	708490	C

REVISIONS

SHEET	EFF	ZONE	REV	DESCRIPTION	BY	CK	DATE	APPROVAL
1	1 up		A	ADDED NEW DIMENSIONS TO I/D	[illegible]	[illegible]	[illegible]	[illegible]
1	1 up		B	NOTE (1), MOLDED [illegible] POTTED. PINS [illegible] [illegible] [illegible] TWISTED PAIR	[illegible]	[illegible]	20 Apr 67	CC
1	2 up	[illegible]	C	ADDED NOTES 14 & 15	[illegible]	[illegible]	28 Jun 67	[illegible]

TABLE 1

SYMBOL	DESCRIPTION	RECOMMENDED VENDOR (H)	VENDOR PART NO. (A)
22	HOOK-UP WIRE	MIL-SPEC SUPPLY	B1934-22U MIL-W-16878
26	SHIELDED WIRE	MIL-SPEC SUPPLY	1S-B1938-26N-3V MIL-W-16878
P	TWISTED PAIR SHIELDED	MIL-SPEC SUPPLY	2SB734-26N3V [26 AWG PER MIL-W-16878]
Q	TWISTED QUAD. SHIELDED	MIL-SPEC SUPPLY	4SB734-26N3V [26 AWG PER MIL-W-16878]

	PART NO.	SPECIFICATION	NOMENCLATURE OR DESCRIPTION	ELEC REF DES	CODE IDENT	ZONE	ITEM NO.

LIST OF MATERIALS

QTY REQD PER NOTED ASSY

CONFIGURATION

LAYOUT NO.

DIST CODE A

DASH NO.	MODEL NO.	NEXT ASSEMBLY	MODEL NO.	FINAL ASSEMBLY	MODEL NO.

APPLICATION

INTERPRET THIS DRAWING PER STANDARDS IN MIL-D-70327

DIMENSIONS ARE IN INCHES

TOLERANCES ON

DECIMALS: X ± .1, XX ± .03, XXX ± .010, XXXX ± .0050

ANGLES ± 0° 30'

✓ SURFACE ROUGHNESS

HOLE DIA. TOLERANCE

CONTRACT NO. 951630/7-080

DRAWN [signature] DATE 7 Mar 67

CHECK [signature] 8 MAR 67

[signature] 8 Mar 67

[signature] 9/1/67

[signature] 8 Mar 67

DESIGN ACTIVITY APPD [signature]

CUSTOMER

MARSHALL LABORATORIES
TORRANCE, CALIFORNIA

TITLE: TEST CABLE ASSY- TRIAXIAL SEARCH COIL MAGNETOMETER OGO-F-22

SIZE	CODE IDENT NO.	DWG NO.	REV
D	13126	708490	C

SCALE — RELEASED MAR 8 1967 SHEET 1 OF 1

FOLDOUT FRAME 1

4 3

D

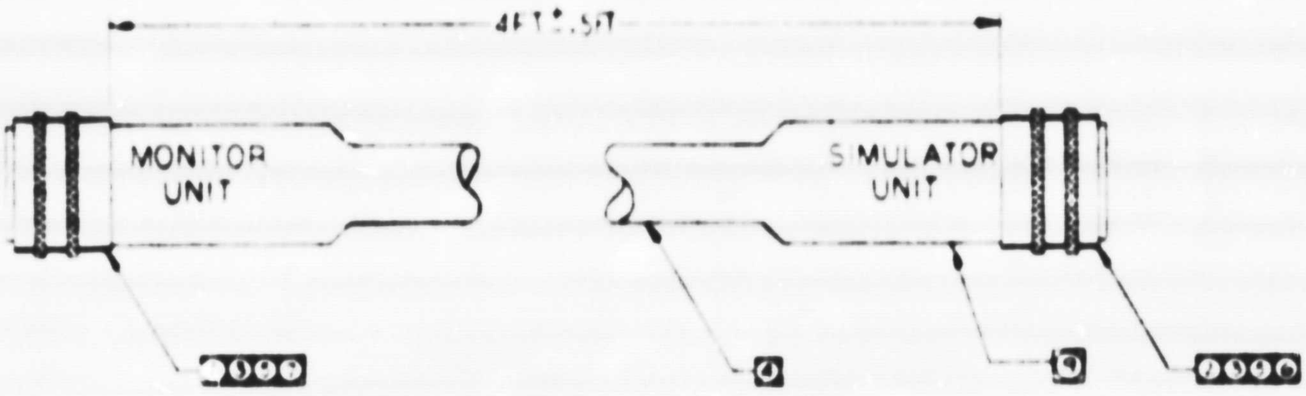

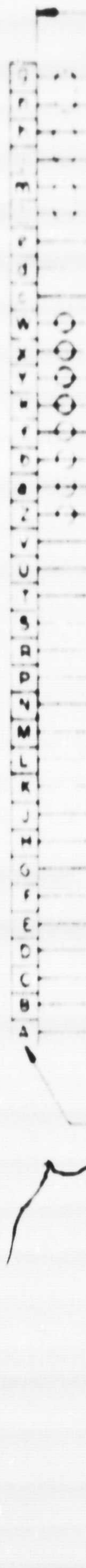

C

B

A

13. SOLDER PER MIL SPEC S40126.
12. PRE-POT CONNECTORS WITH PRC 201 Q PER MIL S40018 CLASS III TYPE II
11. WRAP WIRE WITH PVC TAPE .004 THK PER MIL I 631
10. CABLE TO BE CONTRA HELICALLY LAID
9. CABLE TO BE IDENTIFIED AS "708491", FARSIDE
8. THE WIRE INDICATED IN TABLE I OR EQUIVALENT SHALL BE USED
7. CONNECTOR TO BE IDENTIFIED AS "MONITOR UNIT"
6. CONNECTOR TO BE IDENTIFIED AS "SIMULATOR UNIT"
5. IDENTIFICATION TO BE 1/8 INCH MIN. WHITE LETTERS. HOT STAMP AND FILL.
4. CABLE TO BE COVERED PER MIL-R 6855, NEOPRENE TYPE II GR60, 1/16 WALL
3. CONNECTORS TO BE MOLDED WITH: PR1520 - POLYURETHANE COMPOUND - PRODUCTS RESEARCH OR EQUIVALENT
2. CONNECTOR: BENDIX *PT06A-22-36S
1. CONNECTOR: BENDIX *PT06A-22-36P

NOTES: UNLESS OTHERWISE SPECIFIED

4 3

708491 H

REVISIONS

REV	DESCRIPTION
H	NOTE 3 - MOLDED WAS POTTED; ADDED NOTES [illegible]

RO 68-164

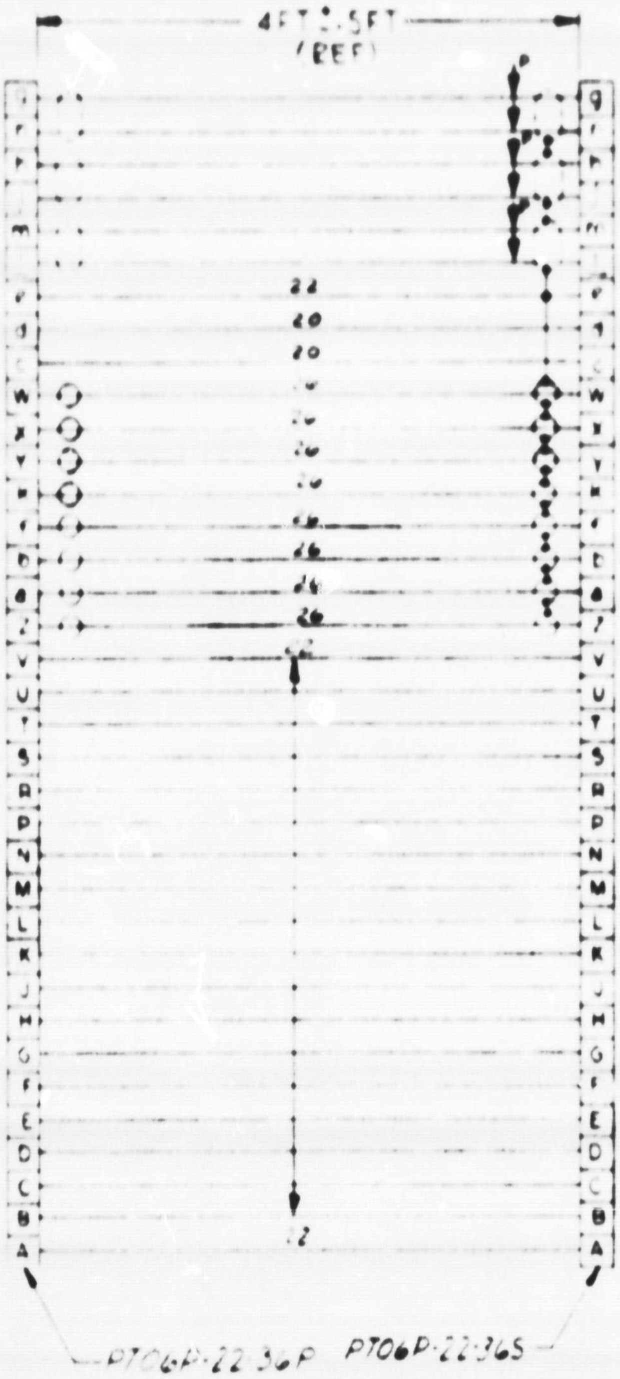

TABLE I			
SYMBOL	DESCRIPTION	RECOMMENDED VENDOR	VENDOR PART NO
20	HOOK UP WIRE	MIL-SPEC SUPPLY	B1934-22U MIL-W-16878
26	SHIELDED WIRE	MIL-SPEC SUPPLY	1S B1938-26N-JV MIL-W-16878
	TWISTED PAIR SHIELDED	MIL-SPEC SUPPLY	2SP734-26NJV 26 AWG PER MIL-W-16878
22	HOOK UP WIRE	MIL-SPEC SUPPLY	B1932-20U MIL-W-16878

PART NO.	SPECIFICATION	NOMENCLATURE OR DESCRIPTION	ELEC REF DES	CODE IDENT	ZONE	ITEM NO.

LIST OF MATERIALS

QTY REQD PER NOTED ASSY
CONFIGURATION
LAYOUT NO
DIST CODE

DASH NO.	MODEL NO.	NEXT ASSEMBLY	MODEL NO	FINAL ASSEMBLY	MODEL NO

APPLICATION

INTERPRET THIS DRAWING PER STANDARDS IN MIL-D-70327
DIMENSIONS ARE IN INCHES
TOLERANCES ON
DECIMALS: .X ± .1; .XX ± .03; .XXX ± .010
ANGLES: ± 0° 30'; .XXXX ± .0050
✓ SURFACE ROUGHNESS
HOLE DIA. TOLERANCE
2.001 AND OVER (UNLAD)

CONTRACT NO 95 630/7 080
DRAWN Stanley
CHECKED
DESIGN ACTIVITY APPD
CUSTOMER

MARSHALL LABORATORIES
TORRANCE, CALIFORNIA

TITLE TEST CABLE ASSEMBLY TRIAXIAL S/C MAGNETOMETER OGO-F-22

SIZE	CODE IDENT NO.	DWG NO.	REV
D	13126	708491	H

SCALE | RELEASED MAR 23 1967 | SHEET 1 OF

FOLDOUT FRAME 1

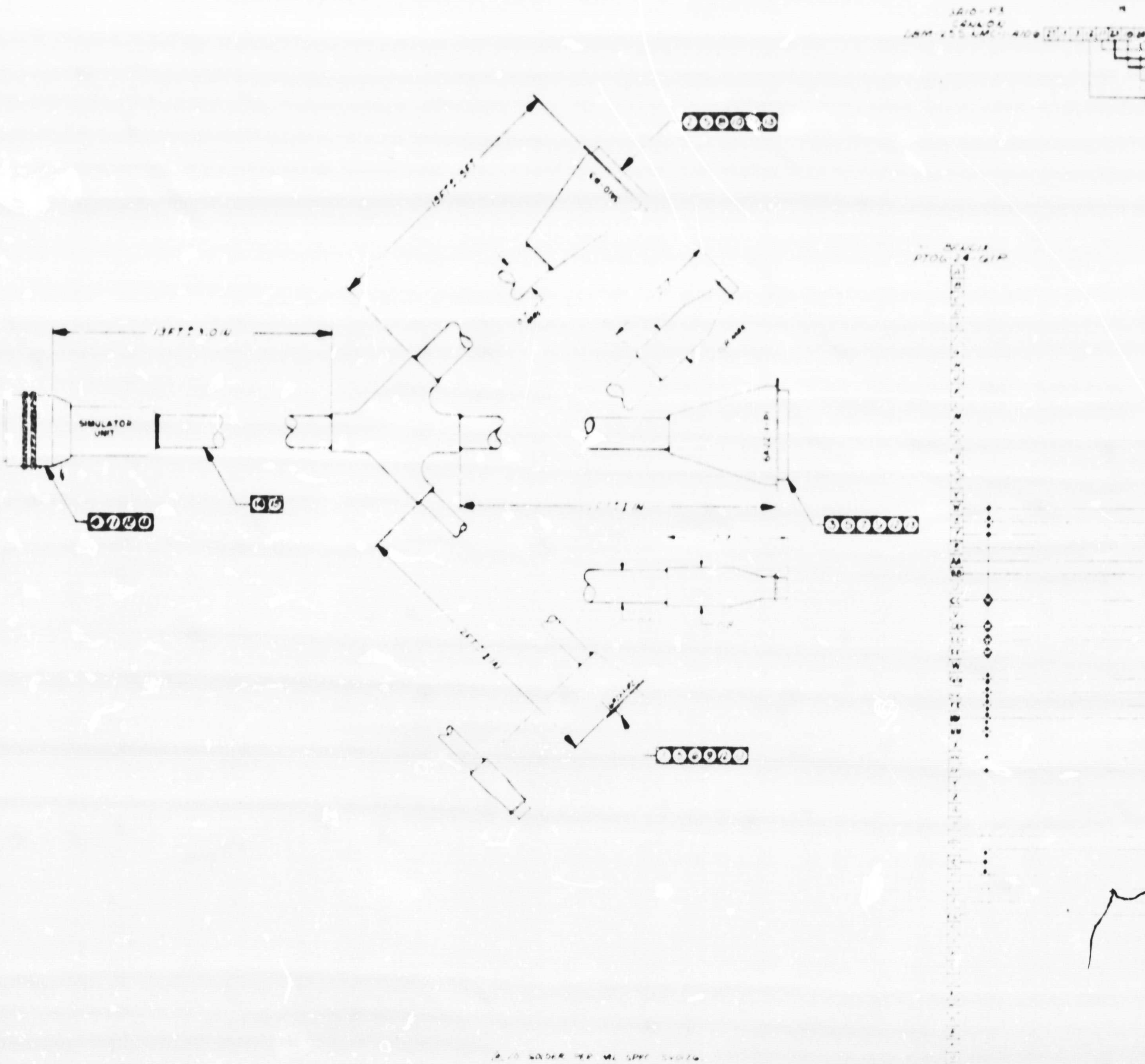

18. [illegible] SOLDER PER MIL SPEC [illegible]
17. [illegible]
16. [illegible]
15. THE WIRE INDICATED IN TABLE [illegible] OR EQUIVALENT SHALL BE USED.
14. CABLE TO BE CONTRA-HELICALLY LAID.
13. CABLE TO BE IDENTIFIED AS [illegible]
12. CABLE TO BE COVERED PER MIL [illegible], NEOPRENE TYPE II GR [illegible] 1/16 WALL.
11. IDENTIFICATION TO BE [illegible] INCH MIN WHITE LETTERS, HOT STAMP & FILL.
10. CONNECTORS TO BE MOLDED WITH [illegible] POLYURETHANE COMPOUND - PRODUCTS RESEARCH OR EQUIVALENT
9. CONNECTOR TO BE IDENTIFIED AS SIMULATOR UNIT
8. CONNECTOR TO BE IDENTIFIED AS [illegible] ASSEMBLY [illegible] SIDE
7. CONNECTOR TO BE IDENTIFIED AS [illegible] SEARCH COIL [illegible] SIDE
6. CONNECTOR TO BE IDENTIFIED AS [illegible]
5. CONNECTOR TO BE IDENTIFIED AS [illegible]
4. CONNECTOR TO BE IDENTIFIED AS [illegible]
3. NO MAGNETIC MATERIAL TO BE USED AT THIS END OF CABLE
2. CONNECTOR: BENDIX PT06A 24-61P
1. CONNECTOR: CANNON DCM [illegible]
CONNECTOR: CANNON DAM [illegible]
CONNECTOR: CANNON DEM 9S [illegible]

NOTES UNLESS OTHERWISE SPECIFIED

FOLDOUT FRAME 2

Page 85

708492 A

Added Notes 19 & 20
Revised Notes 1 1

RO 68-164

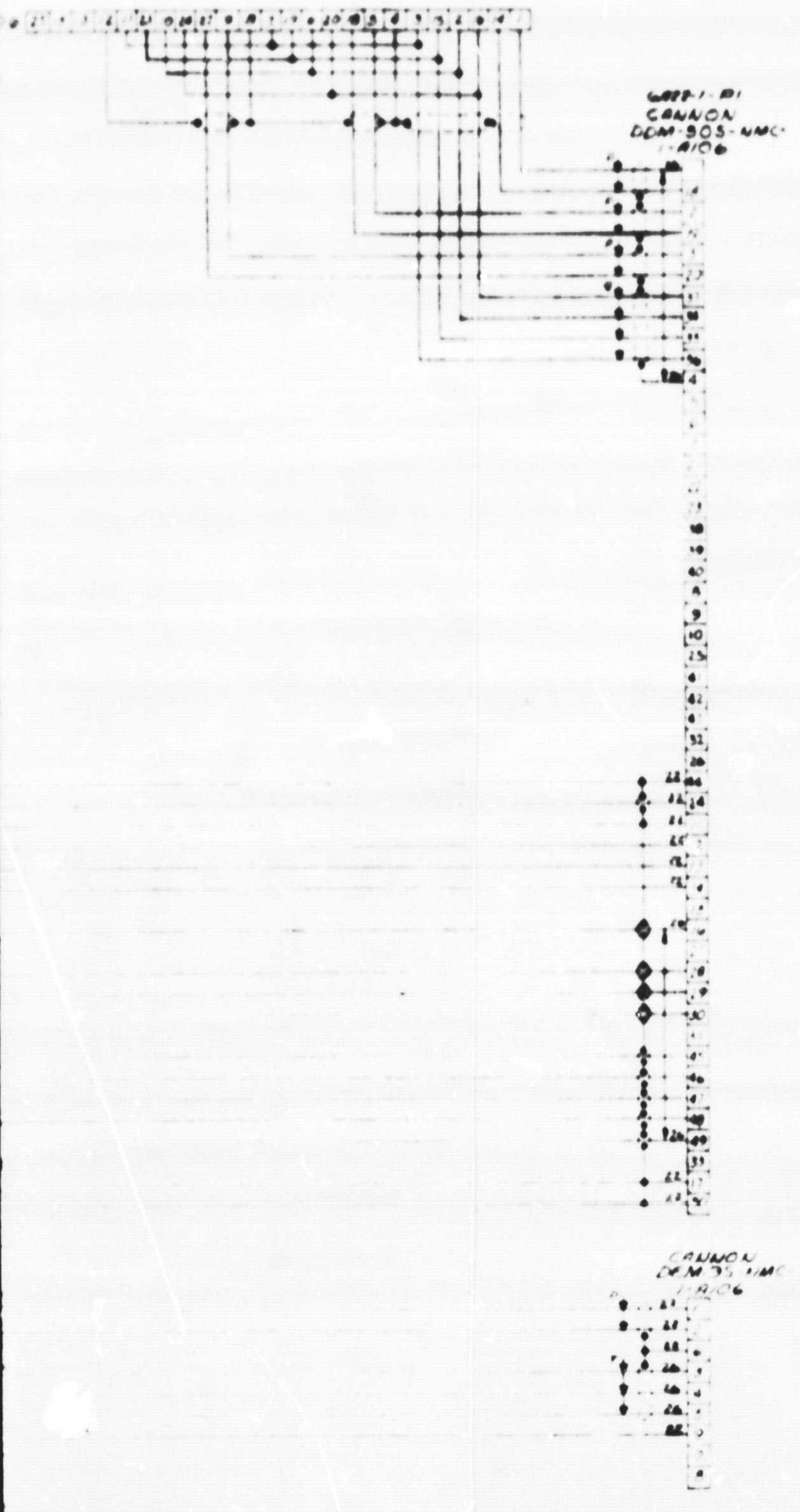

TABLE I

SYMBOL	DESCRIPTION	RECOMMENDED VENDOR	VENDOR PART NO.
[illegible]	HOOK UP WIRE	MIL SPEC SUPPLY	[illegible] MIL W 16878
[illegible]	SHIELDED WIRE	MIL SPEC SUPPLY	[illegible] MIL W 16878
[illegible]	[illegible] WIRE	MIL SPEC SUPPLY	[illegible] MIL W 16878
[illegible]	TWISTED PAIR SHIELDED	MIL SPEC SUPPLY	25B734-26W JV 26 AWG MIL W 16878
[illegible]	TWISTED THREE CONDUCTOR SHIELDED	MIL SPEC SUPPLY	[illegible] 26 AWG MIL W 16878
[illegible]	TWISTED PAIR SHIELDED	MIL SPEC SUPPLY	[illegible] 22W JV 22 AWG MIL W 16878
[illegible]	TWISTED QUAD SHIELDED	MIL SPEC SUPPLY	[illegible] 26 AWG MIL W 16878

LIST OF MATERIALS

MARSHALL LABORATORIES

TEST CABLE ASSY—
TRIAXIAL S/C MAGNETOMETER
OGO-F-22

E | 13126 | 708492 | A

APPLICATION

FOLDOUT FRAME 1

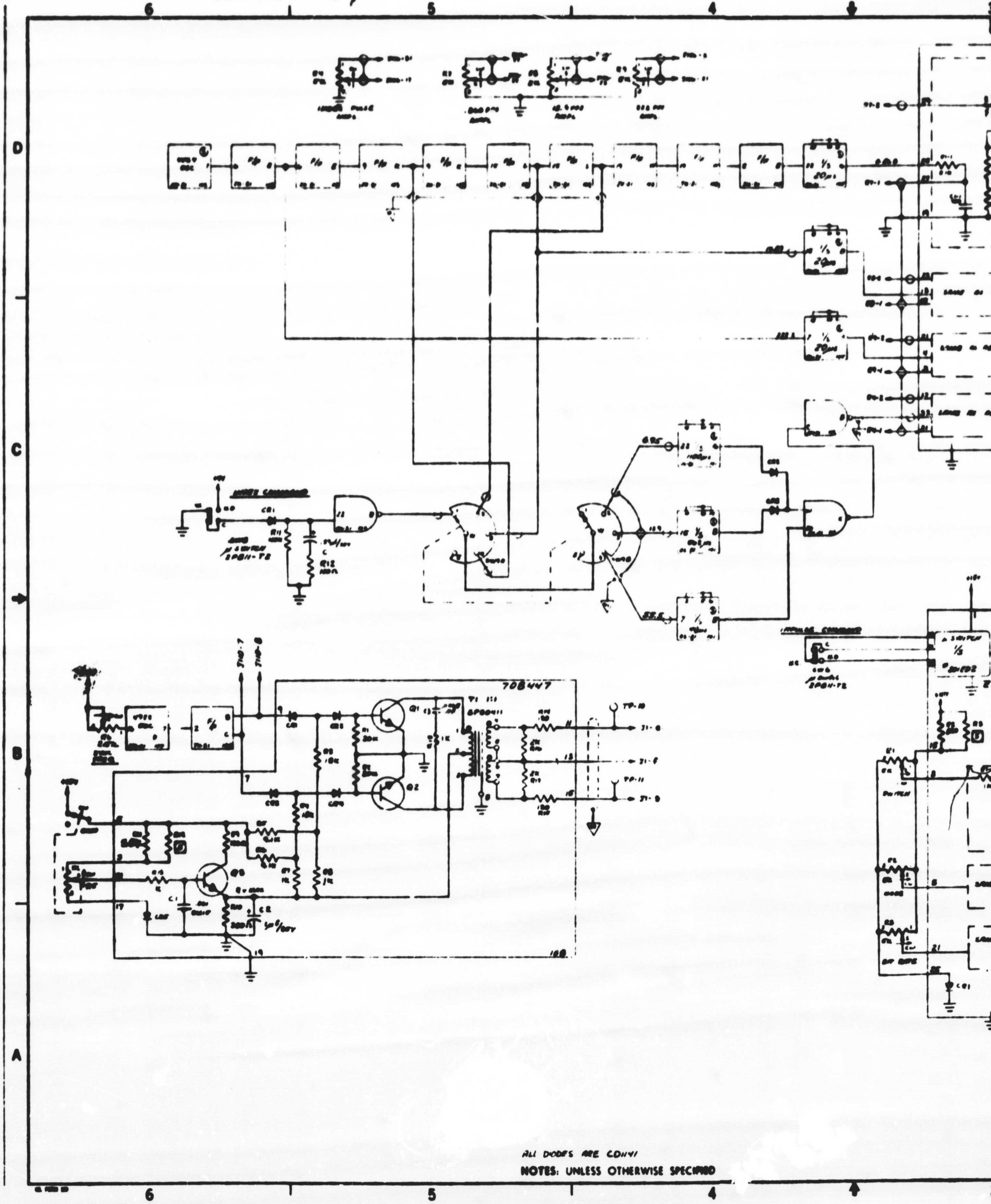

ALL DIODES ARE CD4141

NOTES: UNLESS OTHERWISE SPECIFIED

FOLDOUT FRAME 2

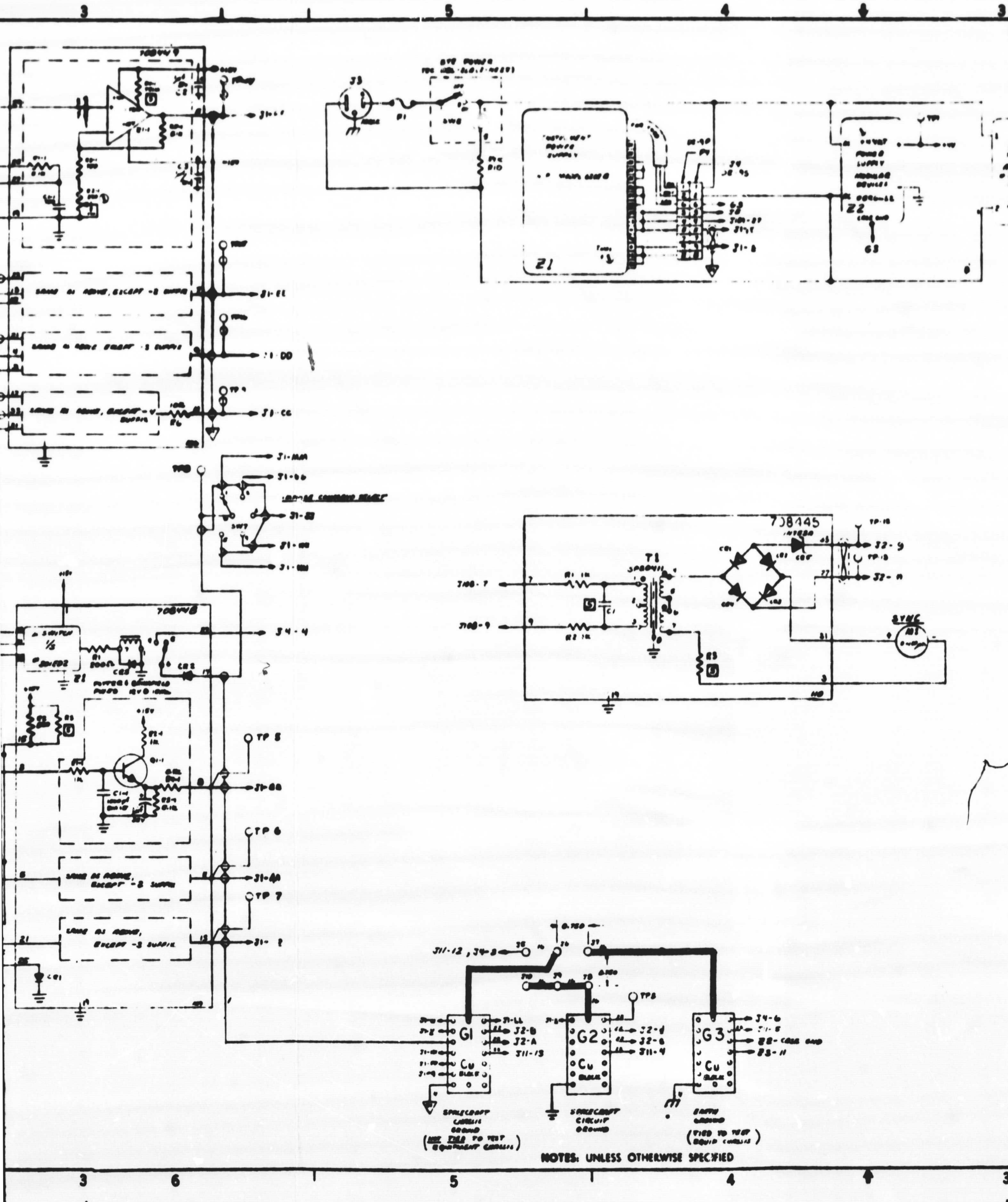

FOLDOUT FRAME 3

Page 86

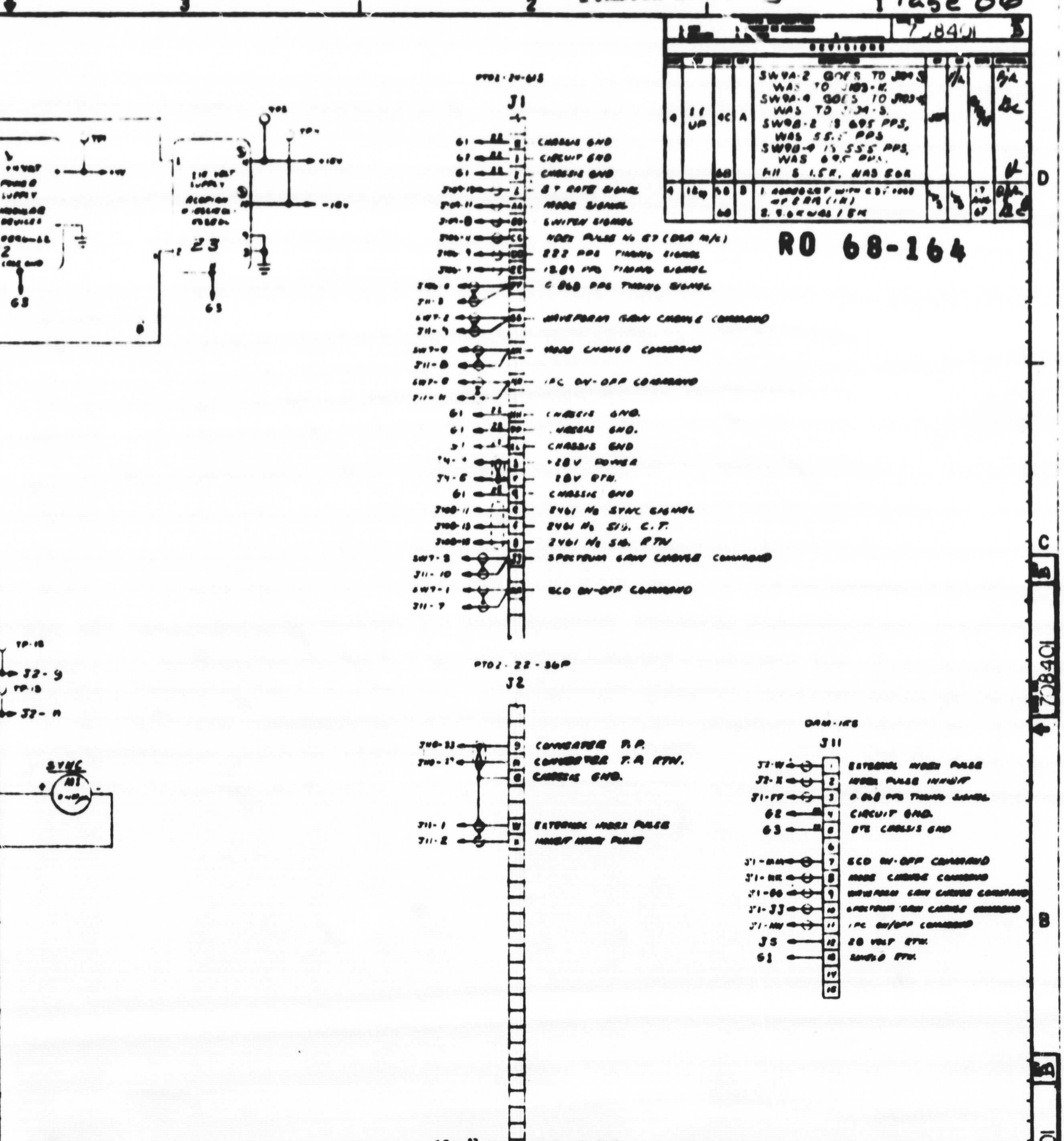

FOLDOUT FRAME 1

FOLDOUT FRAME 2

RO 68-164

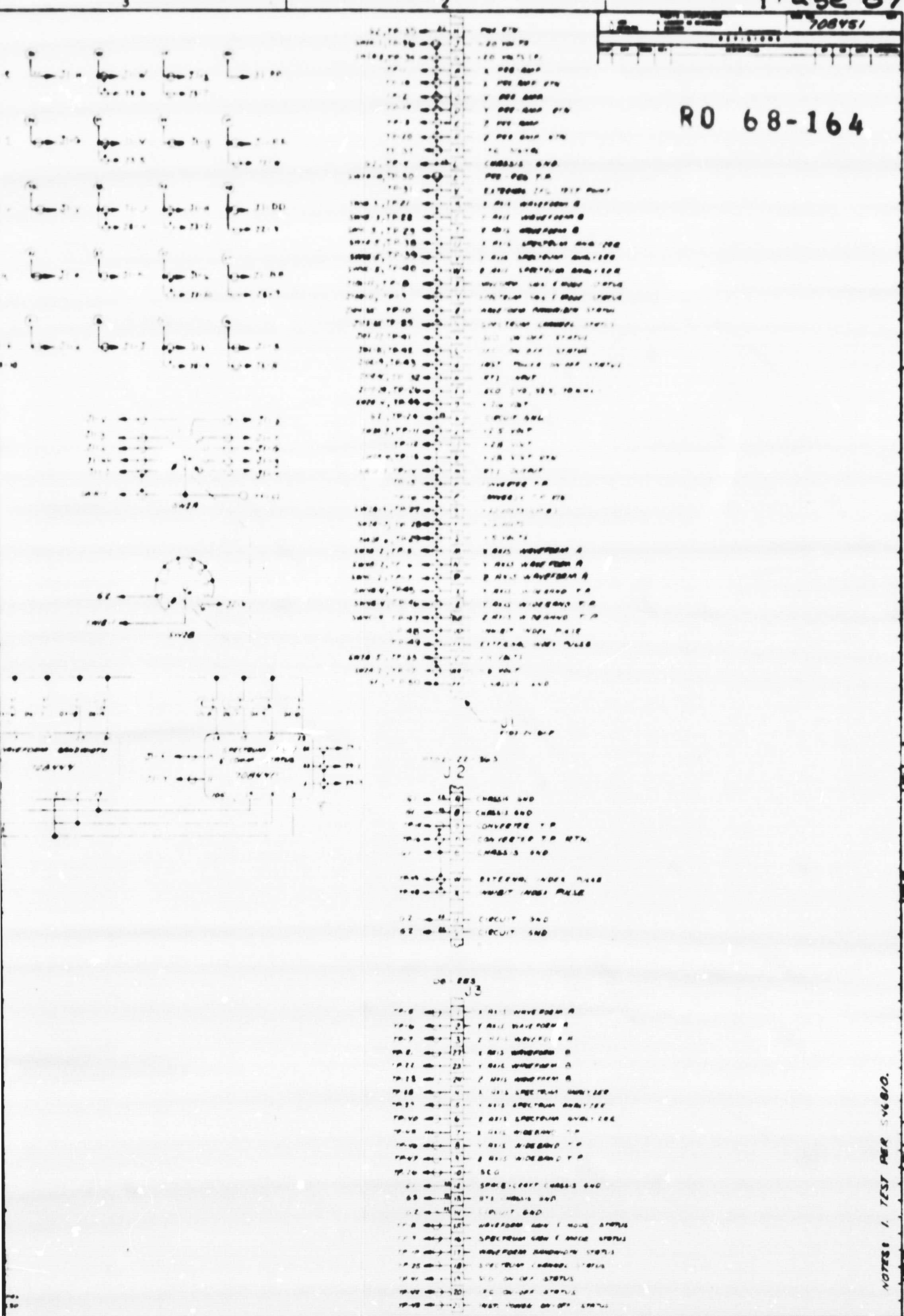

NOTES: 1. TEST PER 546810.

MARSHALL LABORATORIES
TORRANCE, CALIFORNIA

MONITOR UNIT BTE SCHEMATIC
ML 348-1
OGO-F 22 SEARCH COIL MAG.

E 13126 708451

LIST OF MATERIALS

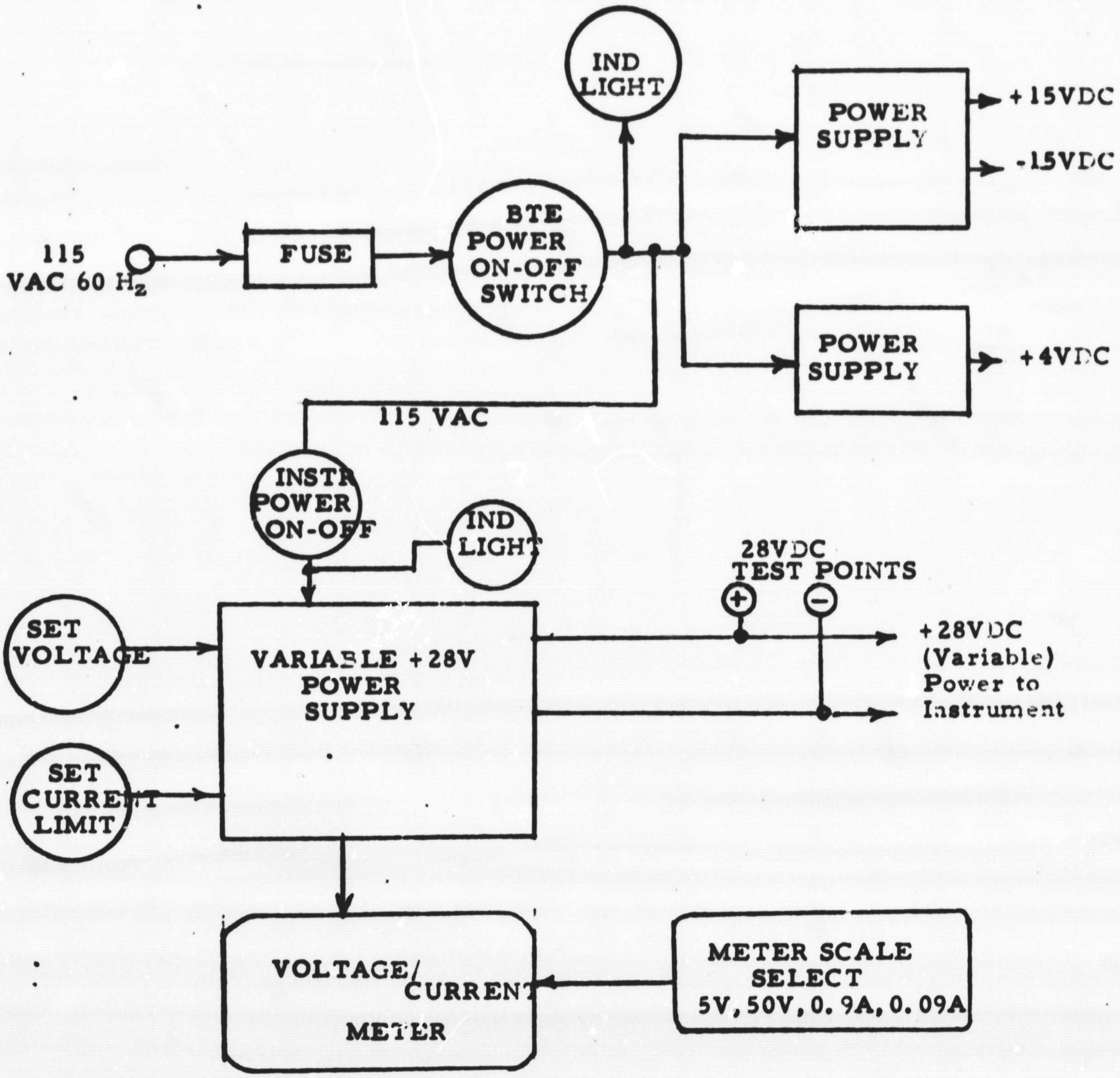

FIGURE 59
SIMULATOR INTERNAL POWER AND INSTRUMENT POWER

the test points together and setting the required limit current on the current meter.

4.2.1.2 Sync Signal Generator

Figure 60 shows a block diagram of the circuit which generates the synchronization signal sent to the instrument power supply. As indicated, the voltage controlled oscillator frequency is divided by two and fed to a driver which energizes a transformer. The secondary of the transformer sends a three wire sync signal through a suitable impedance network to the instrument. A front panel control enables the sync signal frequency to be varied ±5% from the nominal value of 2,461 H_z. A second control enables adjustment of the amplitude of the output sync signal from zero to 8 volts p-p. An on-off switch is also included in this control.

A sync meter is included to check the free-run frequency of the instrument. To operate this meter, the sync amplitude control is set to Off, this allows the instrument to free-run. The frequency control is adjusted for a null on the meter and the setting of this control indicates the free-run frequency of the instrument. A null is achieved by beating the converter test point signal from the instrument with the output of the divide by two flip-flop. Two test points are provided for monitoring the output sync signal.

4.2.1.3 Timing and Index Pulse Generator

Figure 61 shows the block diagram of the circuit which generates the timing and index pulses. As indicated, a 444 Hz clock with an accuracy of one percent is counted down in a binary countdown chain to the minimum frequency of 0.87 pulses per second (pps). The output of this final countdown circuit is applied to a one-shot multivibrator which shapes the pulse to worst case conditions of the interface specification and is then passed through an attenuator which can be used to vary the signal between zero to 10 volts p-p. The 13.9 pps and 222 pps timing signals are generated, shaped, and attenuated in a similar manner except that their inputs are taken from different points in the countdown chain.

106

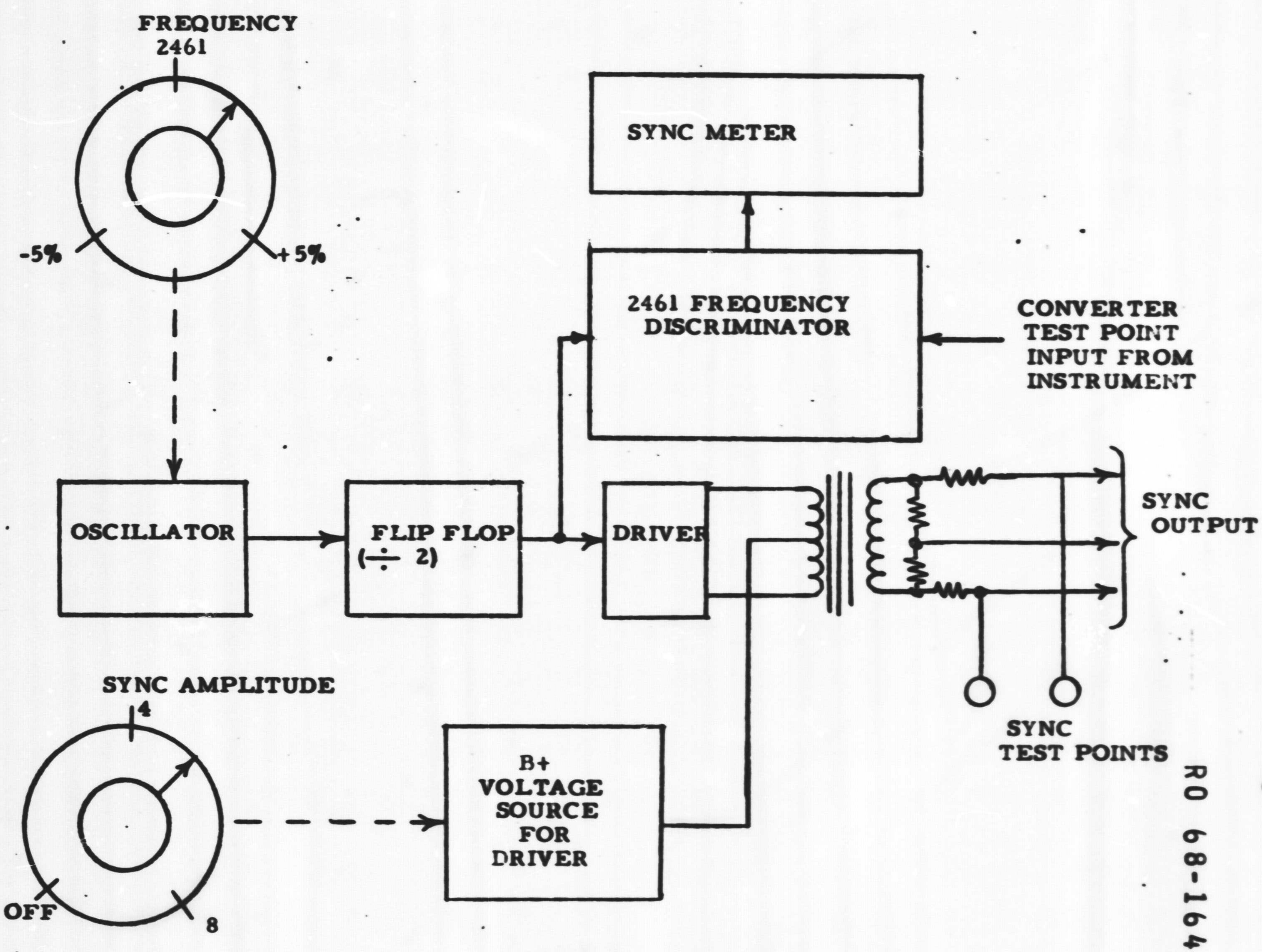

FIGURE 60'
SIMULATOR SYNC SIGNAL GENERATOR

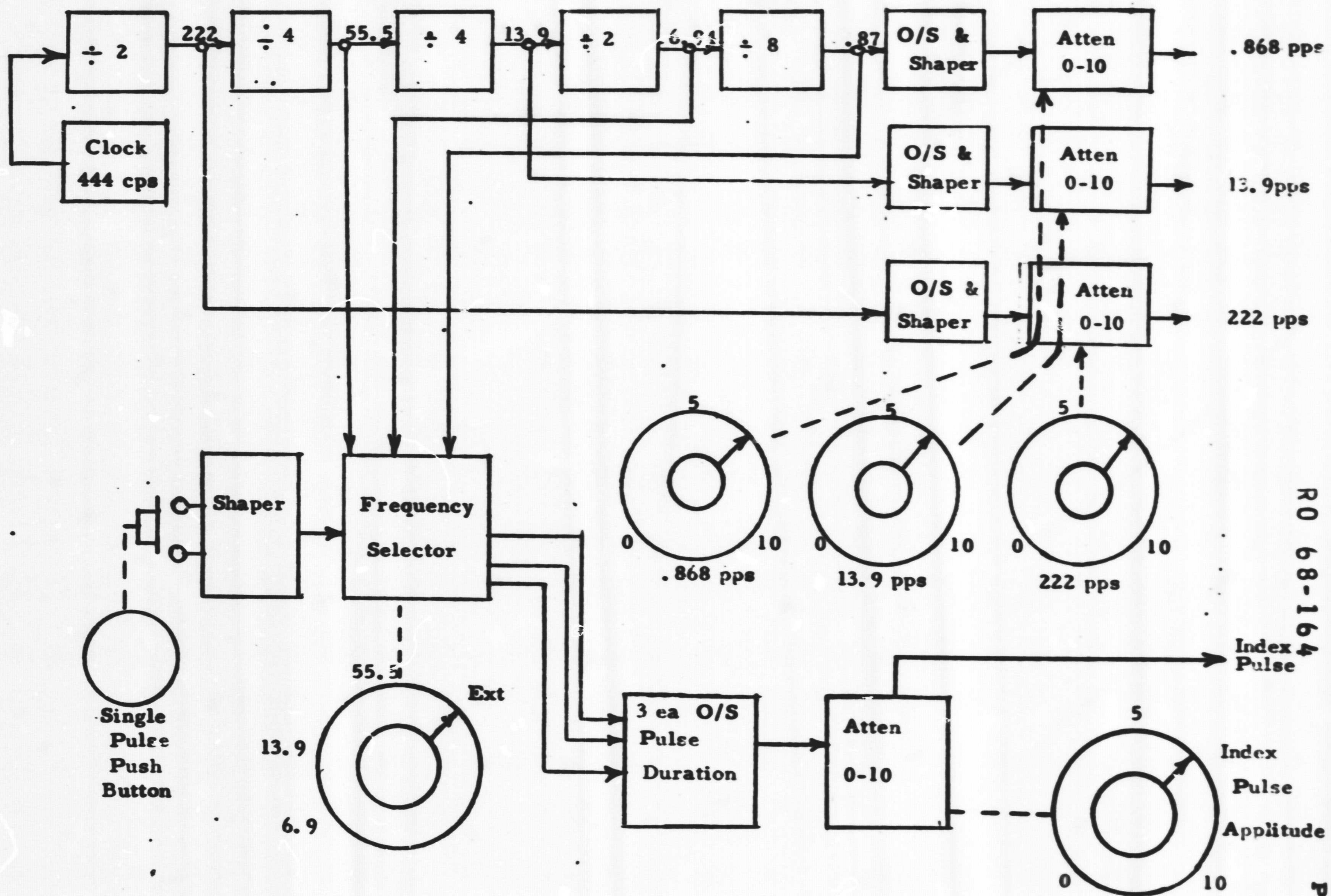

Figure 61

Simulator Timing & Index Pulse Generator

108

The index pulse frequency is selected by front panel control;either 6.9, 13.9, 55.5 pps, or external. In external a single pulse is generated each time the button is pressed. The selected frequency is sent to one of three one-shots which determines proper pulse duration. An attenuator is used to vary the signal from zero to 10 volt p-p.

4.2.1.4 Telemetry Status Signal Generators

Figure 62 shows the block diagram of the circuit which generates the telemetry status signals. Each of these three signals is generated in a similar fashion. The circuitry consists of an attenuator for each output which is controlled by a front panel control. These attenuators utilize the regulated +15 volts as their inputs. Each front panel control is calibrated showing the nominal voltages for each of the states of the signals. Thus, the Switch control is labled V1 and V2; the Mode V3 and V4; and Bit Rate 8K, 16K, and 64K. All of these controls are continuously variable from zero to +10 volts.

4.2.1.5 Command Signal Generator

Figure 63 shows a block diagram of the circuit which generates the five impulse commands used by the instrument. The impulse commands are initiated by a push button switch on the front panel. The output of this switch is applied to a one-shot multivibrator which generates the proper pulse width. This multivibrator energizes a relay which closes the output to power ground. A front panel switch selects the line into which the impulse command is sent.

4.2.2 Monitor Unit

The Monitor Unit contains internal power supplies, a status indicator light array, a digital voltmeter, frequency discriminators, and a 50 pin test point array.

4.2.2.1 Internal Power Supplies

Fused AC power is used to energize the internal +26 and -6 volt power supplies for operation of the status indicator light drivers and status decoder circuits.

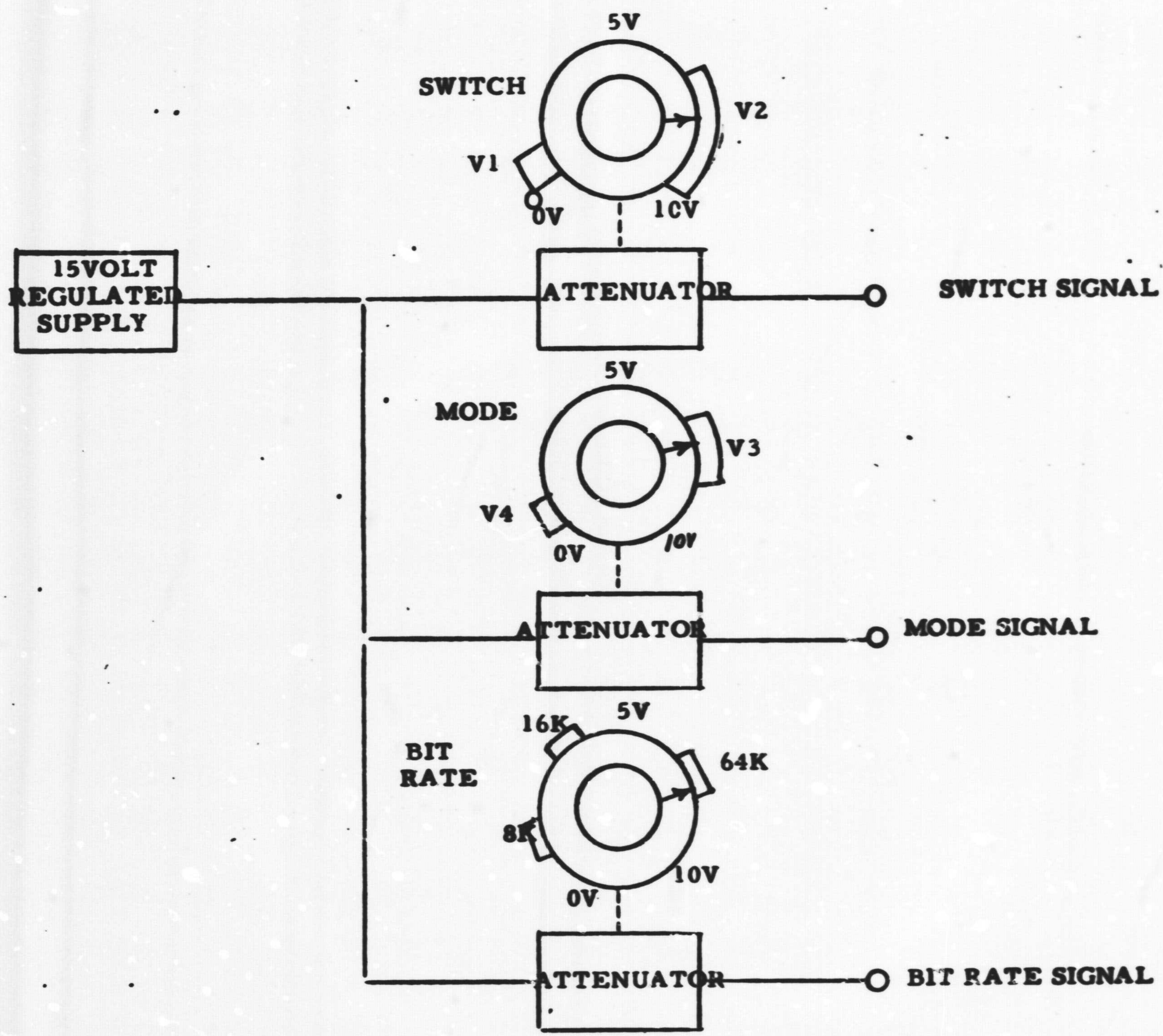

FIGURE 62
SIMULATOR TELEMETRY STATUS SIGNAL GENERATORS

110

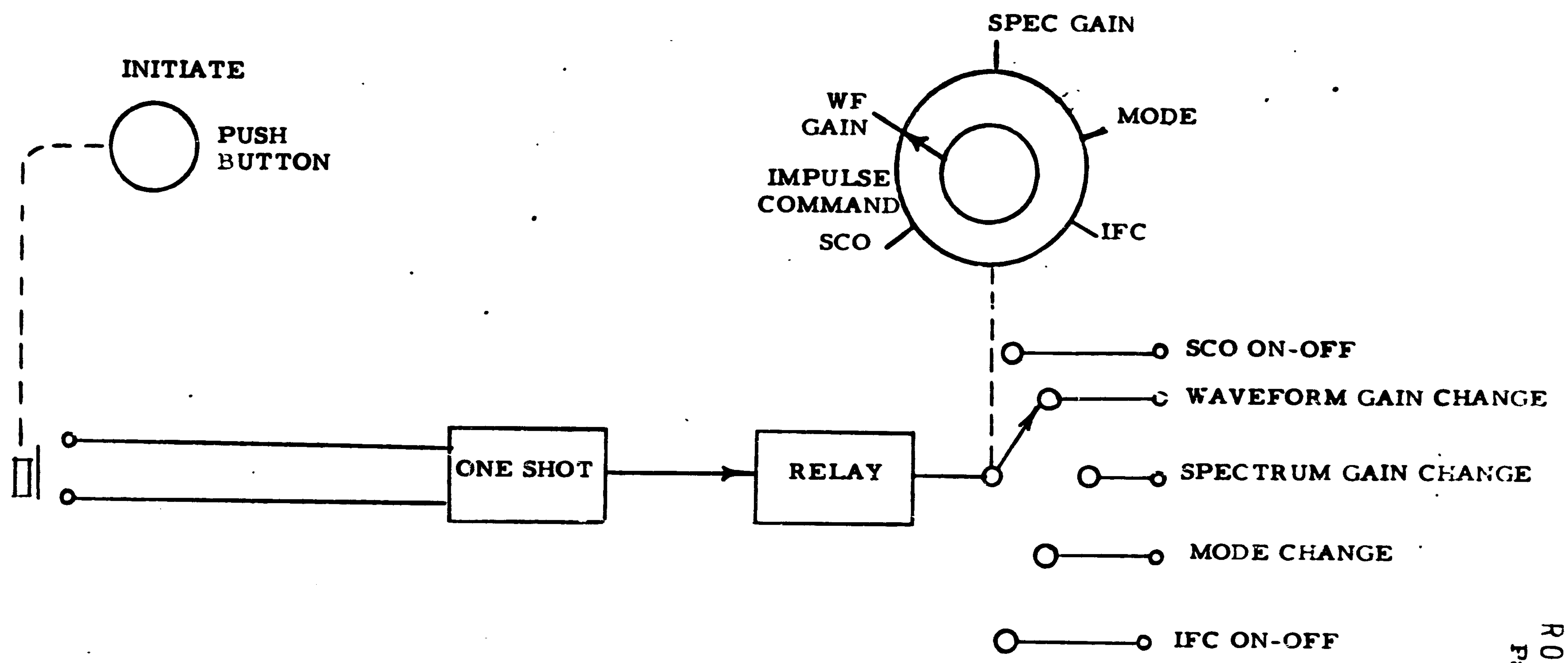

FIGURE 63
SIMULATOR COMMAND SIGNAL GENERATORS

4.2.2.2 Test Point Array

A front panel mounted 50 pin test point array is supplied for monitoring each pin in the instrument test connector J3. The labels and full titles are listed in Figure 64 and 65.

Front Panel Label	J3 Pin Number	Full Name
X PA	1	X Axis Preamp
Y PA	2	Y Axis Preamp
Z PA	3	Z Axis Preamp
CH GR	4	Chassis Ground (Shield)
X WF A	5	X Axis Waveform A
Y WF A	6	Y Axis Waveform B
Z WF A	7	Z Axis Waveform C
WF GM S	8	Waveform Gain and Mode Status
SP GM S	9	Spectrum Gain & Mode Status
W.F BW S	10	Waveform Bandwidth Status
+2.5	11	+2.5 volt
+28	12	+28 volts
+28R	13	+28 volt return
Temp	14	RT1 output
CONV	15	Converter T.P.
CONV R	16	Converter T.P. return
-6V	17	-6 volt
X PA R	18	X Axis Preamp return
Y PA R	19	Y Axis Preamp return
Z PAR R	20	Z Axis preamp return
X WF B	21	X Axis Waveform B
Y WF B	22	Y Axis Waveform B
Z WF B	23	Z Axis Waveform B
CKT GR	24	Circuit Ground
SP CH S	25	Spectrum Channel Status
S C O	26	SCO
+20V(M)	27	+20 volts (main body)
+6V	28	+6 volts
+5V	29	+5 volts
+22V	30	Preregulator T.P.
IFC IN	31	External Test IFC input
RT IN	32	RT1 Input
+4V	33	+4 volts
+20V (P)	34	+20 volts (preamp)
PWR R	35	Power return (±20 volts pre-amp
-20V	36	-20 volts
IFC	37	IFC Signal
X SP A	38	X Axis spectrum analyzer
Y SP A	39	Y Axis spectrum analyzer
Z SP A	40	Z Axis spectrum analyzer
SCO S	41	SCO ON-OFF Status
IFC S	42	IFC ON-OFF Status
PWR S	43	Instrument On-Off power status
+2.6V	44	+2.6 volts
X WB	45	X Axis Wideband T.P.
Y WB	46	Y Axis Wideband T.P.
Z WB	47	Z Axis Wideband T.P.
II P	48	Inhibit Index Pulse
EI P	49	External Index Pulse
CH GR	50	Chassis Ground

Figure 64, Monitor Unit Test Point Identification
Listed by Test Point Number

Front Panel Label	J3 Pin Number	Full Name
CH GR	4	Chassis Ground (shield)
CH GR	50	Chassis Ground
CKT GR	24	Circuit Ground
CONV	15	Converter T.P.
CONV R	16	Converter T.P. return
EIP	49	External Index Pulse
IFC	37	IFC Signal
IFC IN	31	External Test IFC Input
IFC S	42	IFC On-Off Status
IIP	48	Inhibit Index Pulse
PWR R	35	Power Return (± 20V preamp)
PWR S	43	Instrument On-Off Power Status
RT IN	32	RTI Input
SCO	26	SCO
SCO S	41	SCO On-Off Status
SP CHS	25	Spectrum Channel Status
SP GM S	9	Spectrum Gain and Mode Status
TEMP	14	RTI Output
WF BWS	10	Waveform Bandwidth Status
WF GM S	8	Waveform Gain and Mode Status
X PA	1	X Axis Preamp
Y PA	2	Y Axis Preamp
Z PA	3	Z Axis Preamp
X PA R	18	X Axis Preamp Return
Y PA R	19	Y Axis Preamp Return
Z PA R	20	Z Axis Preamp Return
X SP A	38	X Axis Spectrum Analyzer
Y SP A	39	Y Axis Spectrum Analyzer
Z SP A	40	Z Axis Spectrum Analyzer

Figure 65A Monitor Unit Test Point Identification
Listed by Front Panel Label

X WB	45	X Axis Wideband T. P.
Y WB	46	Y Axis Wideband T. P.
Z WB	47	Z Axis Wideband T. P.
X WF A	5	X Axis Waveform A
Y WF A	6	Y Axis Waveform B
Z WF A	7	Z Axis Waveform C
X WF B	21	X Axis Waveform B
Y WF B	22	Y Axis Waveform B
Z WF B	23	Z Axis Waveform B
-20V	36	-20 Volts
-6V	17	-6 Volts
+2.5	11	+2.5 Volts
+2.6V	44	+2.6 Volts
+4V	33	+4 Volts
+5V	29	+5 Volts
+6V	28	+6 Volts
+20 (M)	27	+20 Volts (Main Body)
+20V (p)	34	_20 Volts (Preamp)
+22V	30	Preregulator T. P.
+28	12	+28 Volts
+28R	13	+28 Volt Return

Figure 65B Monitor Unit Test Point Identification
Listed by Front Panel Label

4.2.2.3 Digital Voltmeter

A digital voltmeter is built into the front panel for monitoring the instrument power supply voltages, the signal voltages (waveform, wideband, or spectrum outputs), and the instrument temperature (thermistor-resistor network voltage). The voltage to be monitored is controlled by the DVM selector control, the voltage selector control, and the signal selector controls.

4.2.2.4 Frequency Discriminators

Three frequency discriminator subassemblies with indicator meters are front panel mounted for monitoring at all times the three SCO Frequency channels. The signal input to each frequency discriminator is prefiltered with a standard telemetry filter (bandwidth = fo ± 7.5% fo, 0 to -3db). demodulated outputs of the discriminators are available at test jacks at the rear of the chassis for driving external test equipment.

4.2.2.5 Status Indicator Lights

Status indicator lights are front panel mounted for monitoring the status signal lines of the instrument. Four of the nine status lines contain multilevel voltage signals thus analog decoders circuits proceed the indicator light drivers. The power turn on switch for the Monitor Unit located in this area is labled BTE power.

4.2.2.6 Temperature

When monitoring the thermistor-resistor network the DVM voltage reading is converted to temperature thus: (Temperature in ^{o}C) = (V_{DVM}) X (100). Precision of reading is $\pm 0.5^{o}C$.

5.0 CIRCUIT DESCRIPTIONS

The following paragraphs describe, in detail, circuits which were utilized in the OGO-F-22 Search Coil Magnetometer. They are the following:

1. Search Coil Sensor
2. Preamplifier
3. Heater
4. 400 Hz Notch Filter
5. Variable Low Pass Filter and Buffer
6. Fixed Gain and Gain Change Amplifiers
7. Output Amplifier
8. 1850 Hz Low Pass Filter
9. Bandpass Amplifiers
10. Peak Detector and Dump
11. Spectrum Commutator
12. SCO Low Pass Filter
13. Subcarrier Oscillator (SCO)
14. SCO Output Amplifier
15. Waveform Mode Switch
16. Impulse Latch
17. IFC Attenuator
18. Sync Amplifier
19. Power Supply Converter
20. Power Supply Preregulator (+22 volts)
21. Power Supply Post regulators

5.1 Search Coil Sensor

For the past five years Marshall Laboratories has been actively engaged in the field of search coil magnetometer development. Part of this work has entailed the design and evaluation of the basic sensor itself. We used this knowledge to design a sensor for the OGO-F Magnetometer which is near optimum with regard to sensitivity, frequency response, and weight within the prescribed boundary conditions.

The basic sensitivity for a search coil magnetometer is:

$$K = 2\pi N A \mu_e \times 10^{-7} \frac{\text{microvolts } (\mu v) \text{ seconds (sec)}}{\text{gamma } (\gamma)}$$

117

where N = number of turns

A = area in cm^2

μ_e = effective mu of the sensor

This formula neglects any fringing effects which may take place

The parameters N and A are rather obvious and need no further discussion at this point; however, value for the effective mu of the core needs further evaluation. In his book, "Ferro Magnetism", Bozorth describes the relationship between the real mu and the effective mu of a search coil. On Page 848, he depicts the relationship of real mu to effective mu as a function of the $\frac{\ell}{d}$ ratio of the core of a search coil. If one assumes that the real mu of the core is infinity, then the expression for the approximate effective mu, is:

$$\mu_e \approx 1.6 \left(\frac{\ell}{d}\right)^{1.6}$$

where ℓ = length of core

d = effective core diameter

Combining the two above equations, leads one to the following result:

$$K \approx 2\pi N (1.6) \ell^{1.6} d^{0.4} \times 10^{-7} \frac{\mu v - sec}{\gamma}$$

From the above, it can be seen that the sensitivity of the search coil is a much stronger function of its length rather than of its diameter.

At first glance, it might appear that d should be chosen to be as large as practical; however, the obvious limitations are those of weight of the core itself and also the winding. On the other hand, d cannot be too small since then the effective mu will become too large and the assumption that the real mu is much greater than the effective mu will no longer be a valid one. One would then be operating in a region where changes in the real mu of the core material would drastically affect the effective mu and therefore the sensitivy of the sensor. Too large an effective mu can cause problems as a result of operation in a d-c magnetic field which can saturate the core. For example, if the effective mu of the core were 30,000 and if it were placed in the earth's magnetic field, one would find approximately 15,000 gauss in the core. This flux density will saturate the types of materials which are best for this application. Another real factor involved in the selection of the core cross section is the availability of material. Experience has shown that delivery problems can be expected when other than standard material is requested from a magnetic material manufacturer. It is thus extremely advantageous to use a standard size and type of material.

Based upon the above considerations, Marshall Laboratories fabricated the core from 4 mil laminations 1/8" wide of Round HyMu 80 with a build up of one eighth of an inch. This core geometry provided an effective mu of approximately 1600. This value is conservative from the standpoint of variations of real mu because the effective mu of the material is as large as 24,000.

The location of the windings on the cores is important from the consideration of fringing fields. Figure 66 shows the measured sensitivity of one winding of 12,500 turns as a function of its location along the core. Any winding mounted near the end of the core will have its sensitivity reduced by more than 50% as a result of fringing effects. For OGO-F, the windings are placed within one inch of the center of the core.

The parameters which remain to be determined now are the number of turns to be placed upon the coils and the winding methods used. Both of these parameters are dictated, to a large degree, by the required resonant frequency of the sensor. There is also a strong interrelation between the number of turns (therefore the core inductance) and the signal to noise ratio of the sensor preamp combination. This is discussed in more detail in Paragraph 5.2.

The winding techniques used are important in that they affect the winding capacity and therefore the resonant frequency of the sensor. The windings used for this system consists of 100,000 turns of No. 47 wire which are wound upon 20 equal sized sections each with a width of approximately 0.1" and containing 5,000 turns of wire.

This technique provided a significant improvement over winding methods used on the OGO-E magnetomter sensor (two 1" bobbins with 50,000 random turns on each).

This improvement realized an increased resonant frequency of greater than 1,000 cps, with a corresponding improvement in signal to noise ratio as described in Sections 5.1.1, 5.2.1, 5.2.2 and 5.2.3.

5.1.1 Improvements In The Sensor

Much work has been done in the past in the area of sensor design. The present design was evolved after extensive testing of various core materials and analysis and measurement of various form factors (length to diameter ratios). The present design is a balance between sensitivity, weight, size, saturation effects, stability of sensor performance with respect to environmental stress and consistency of performance among sensors. The integrity and reliability has been proven by the successful performance in space of sensors of this basic design.

Any selected core configuration yields a constant ratio of sensitivity to square root of inductance. The sensitivity is proportional to the number of turns while the inductance is proportional to the square of the number of turns. It is this ratio, as can be seen from the detailed noise analysis, that determines the high frequency signal to noise ratio. For a given core form factor, the high frequency signal to noise is independent of the number of turns.

19

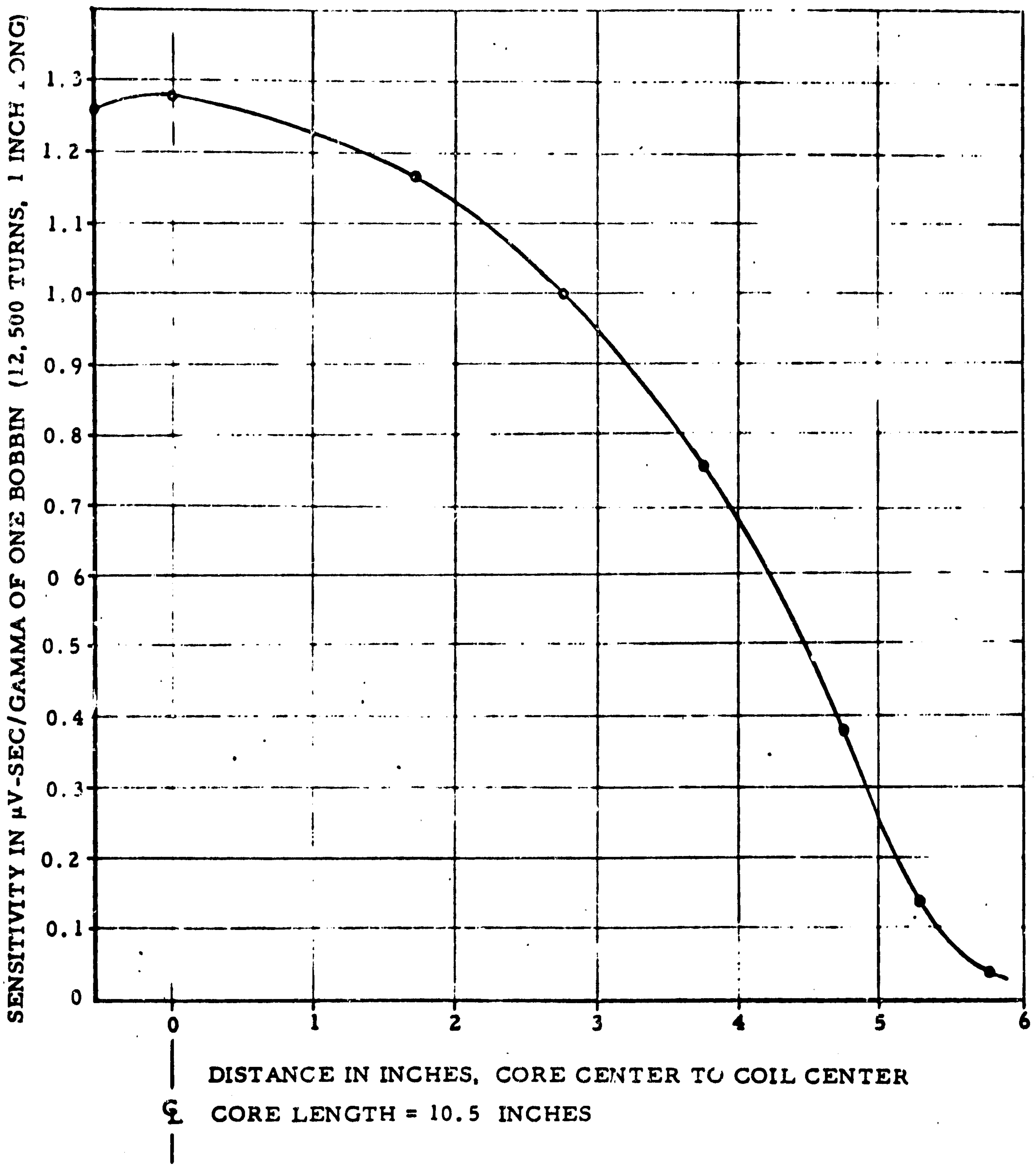

FIGURE 66
EFFECT OF FRINGING FIELDS

The determining factors of the low frequency signal to noise ratio are completely different. The noise power is sensor independent, the signal power is proportional to the square of the sensitivity or number of turns. The signal to noise power ratio at low frequencies can be doubled by a 40% increase in the number of turns while the high frequency signal noise ratio is unaffected. The other effect that occurs as the number of turns is increased is a lowering of the self-resonance frequency of the sensor. This frequency is for constant capacity, proportional to the square root of the inductance or directly proportional to the number of turns. If the self-resonant frequency of one KHZ is to be maintained, the inductance, and therefore, the sensitivity cannot be increased without a corresponding reduction in capacity. A reduction in capacity was accomplished by a reduction in actual winding capacity and by operational techniques utilizing active negative capacitance. The former of these methods, although limited, is the inherent safe and predictable one. Low winding capacity was achieved by piecewise bank winding as described in Section 5.1.

Negative capacitance can be achieved by operational techniques. The negative capacitance subtracts from the real capacitance which results in a net capacitance reduction. A basic system for achieving negative capacitance consists of a discrete capacitor connected to both the input and output of a non-inverting amplifier. The input capacity of such a system is the real capacity multiplied by one minus the voltage gain of the amplifier. This system is implemented by using a separate feedback loop in the preamplifier to derive required voltage gain. As with most positive feedback systems, slight changes in either of the active or passive components can cause large changes in system performance. A maximum capacitance reduction from about 1/2 to 1/4 is achieved without undue restrictions being placed upon component stability requirements.

5.1.2 Low Frequency Noise

In laboratory evaluations of current state-of-the-art Field Effect Transistors measurements have been made of 0.2 microvolts rms total noise over the narrow band waveform channel bandwidth of .01 to 1 HZ. These measurements indicate a reduction of noise of 5 to 1 over formerly used devices.

5.2 Preamplifier Circuit Description

Figure 67 shows a detailed schematic of the preamplifiers and Figure 68 and 69 show simplified equivalent circuit including the search coil. A computer analysis of the preamp circuit was made using ECAP program language (IBM) for dynamic stability. Figure 70 and 71 show gain-phase-frequency plots, computer derived, for open and closed loop conditions. From this data the gain margin at a phase crossover is 20 db and the phase margin at gain crossover is 60 degrees, indicating a dynamically stable amplifier. The dc closed loop gain is 100.8 (≈101) by computer calculations. Figure 72 is a gain frequency plot from actual laboratory test data. Computer derived data indicated a dc open loop over all gain of 50,000 and a dc gain margin (open loop gain less closed loop gain) of 500. The equivalent noise of the input terminal to ground with a 50 kΩ resistor replacing the search coil was found to be 1.0 microvolts peak-to-peak over a 100 second period. Using the conversion of 5 to 1 for noise p-p to noise RMS this yields a value of 0.2 μvolts RMS noise over a frequency spectrum of from 0.01 Hz to 1.0 Hz.

The detailed operation of the preamplifier is as follows: An input voltage (reference Figure 68) is generated by the search coil at the input gate (gate No. 1) of Q2, the input FET. The signal line from the search coil (about 5 inches long) is shielded and the shield is returned to gate No. 2 of Q2 at a voltage null.

The equivalent impedance seen by the shield at gate 2 is ≈ 1 kΩ in parallel with 820 pf. Thus the shield is driven from a relatively low impedance source and the shield follows the search coil output while the capacity of the shield to signal line appears as between gate 1 and 2 but not in shunt with the search coil. Q2 drives Q1 which is connected in a grounded date configuration. Thus there is no voltage amplification at the drain of Q2; hence, no source capacity appears at the gate 1 of Q2. Q2 and Q1 can be considered as a cascode connection. Thus the search coil sees only the grounded drain input capacity at the gate of Q2 thus giving a net high value of net resonant frequency for the search coil preamplifier combination. The flux field was varied to yield a constant amplifier output voltage for different frequencies. The sensitivity of the search coil is approximately 10 microvolts per gamma-hertz. The coil was critically damped with an 11 Meg ohm fixed resistor at the amplifier input terminal to ground. The overall resonant as can be seen in Figure 73 is 1000 Hz.

The amplified drain currents from Q2 drive Q1 which in turn drives Q3 and Q4 resulting in an amplified error voltage across R3. Q5 and Q6 are output transistors acting as power emitter followers for high output current capability. The network CR1, CR2, and I_3 serve to couple the signal at R3 to the output. The on voltage of CR1, and CR2 must be matched against the VBE's of Q5 and Q6 to yield a quiescent collector current through Q5 and Q6 of from 50 to 200 μa. This quiescent current makes the output voltage mode less susceptible to RFI interference. Any RFI currents induced on the output line between the Sensor-Preamplifier Assembly and the Main Body Assembly must overcome the Q5 and Q6 quiescent current before it can create an RFI noise voltage at the output node.

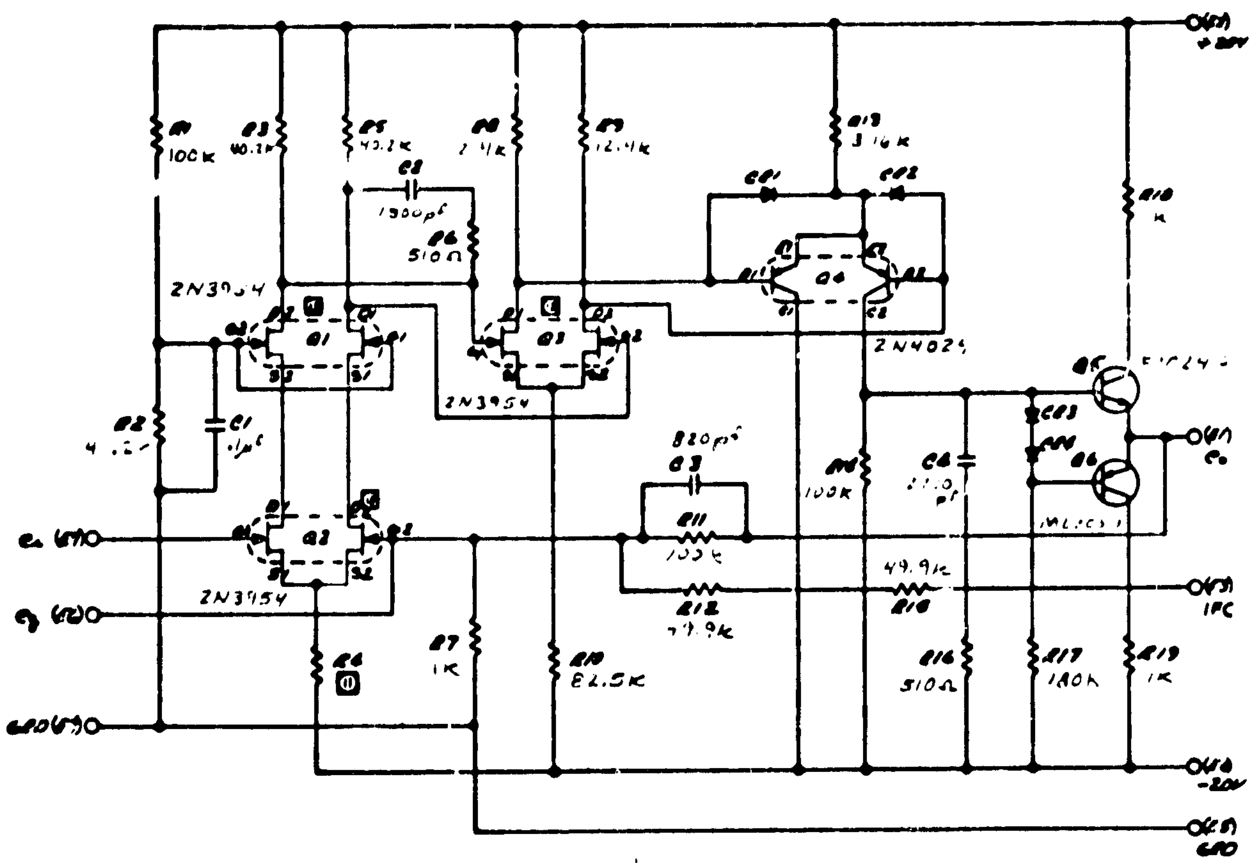

Preamplifier Schematic
Figure 67

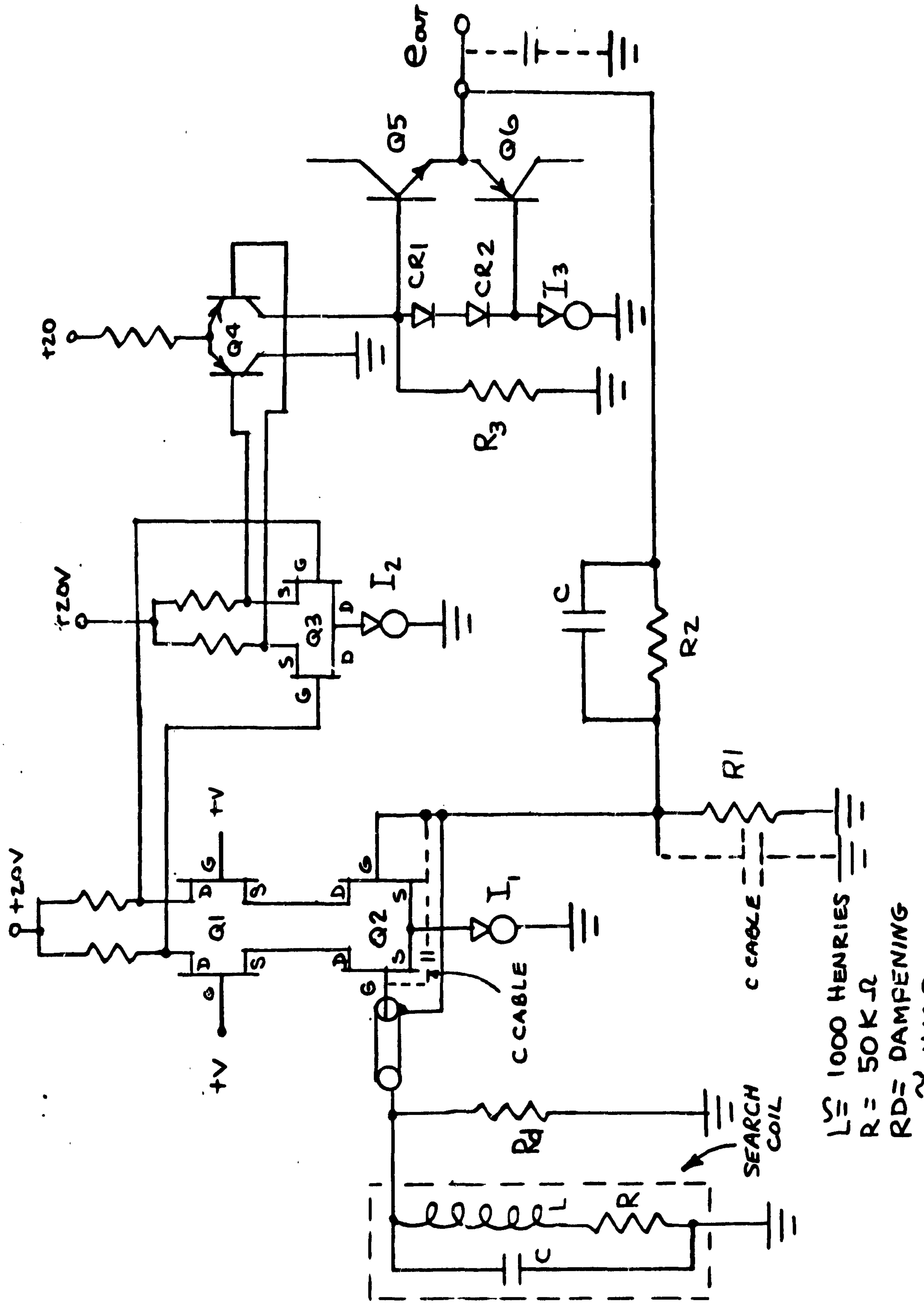

Figure 63 Preamplifier Equivalent Circuit

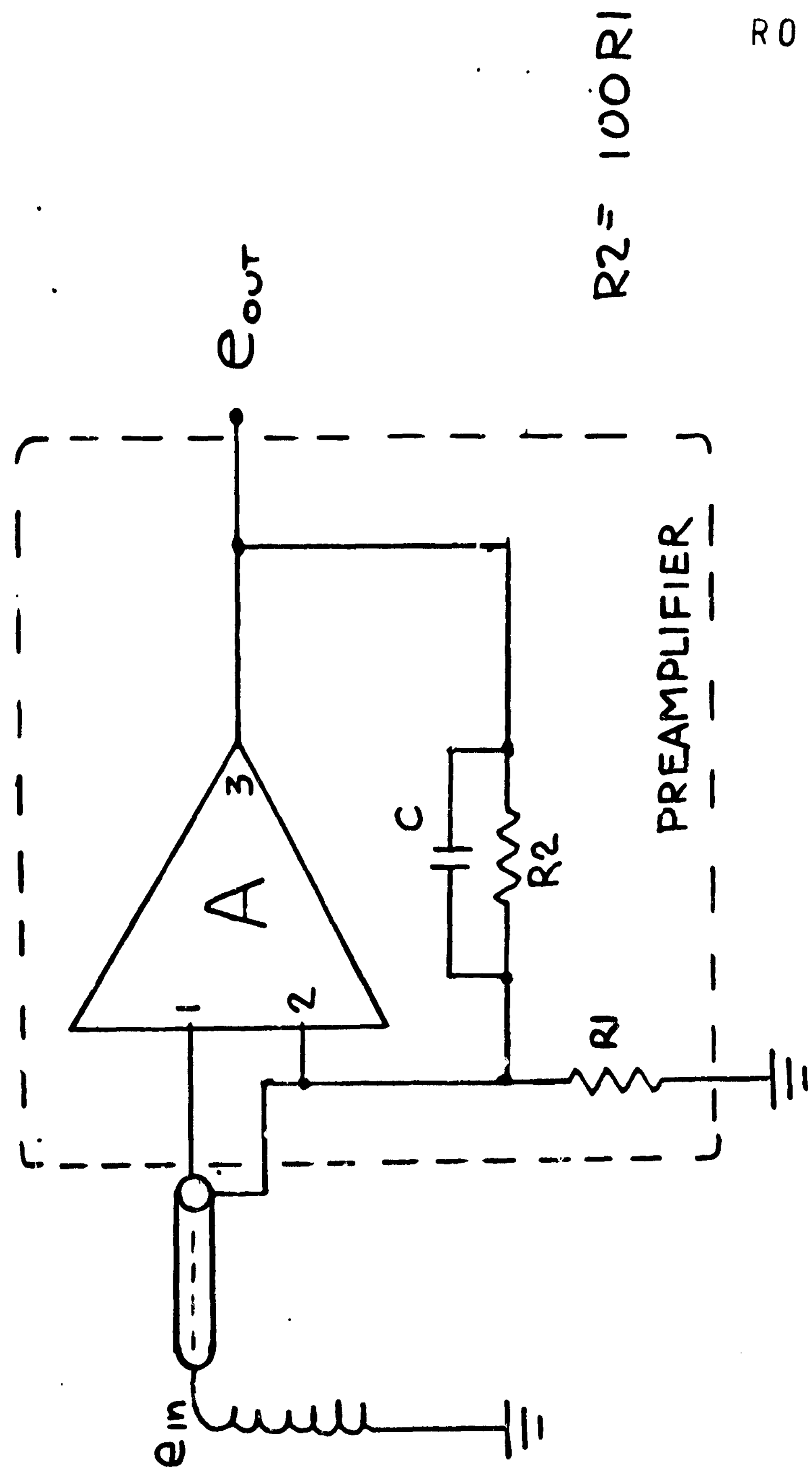

Figure 69 **Preamplifier Equivalent Circuit**

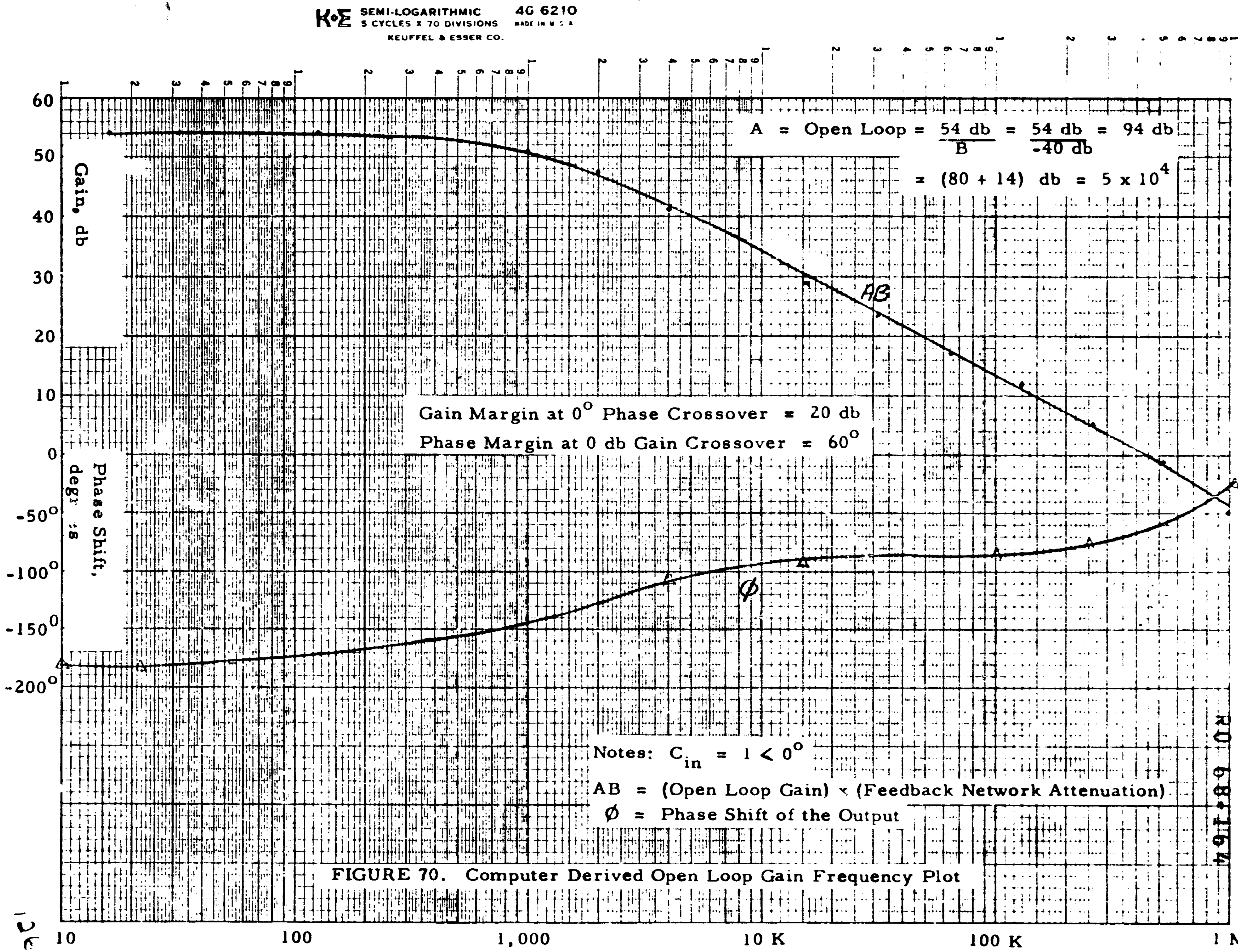

FIGURE 70. Computer Derived Open Loop Gain Frequency Plot

126

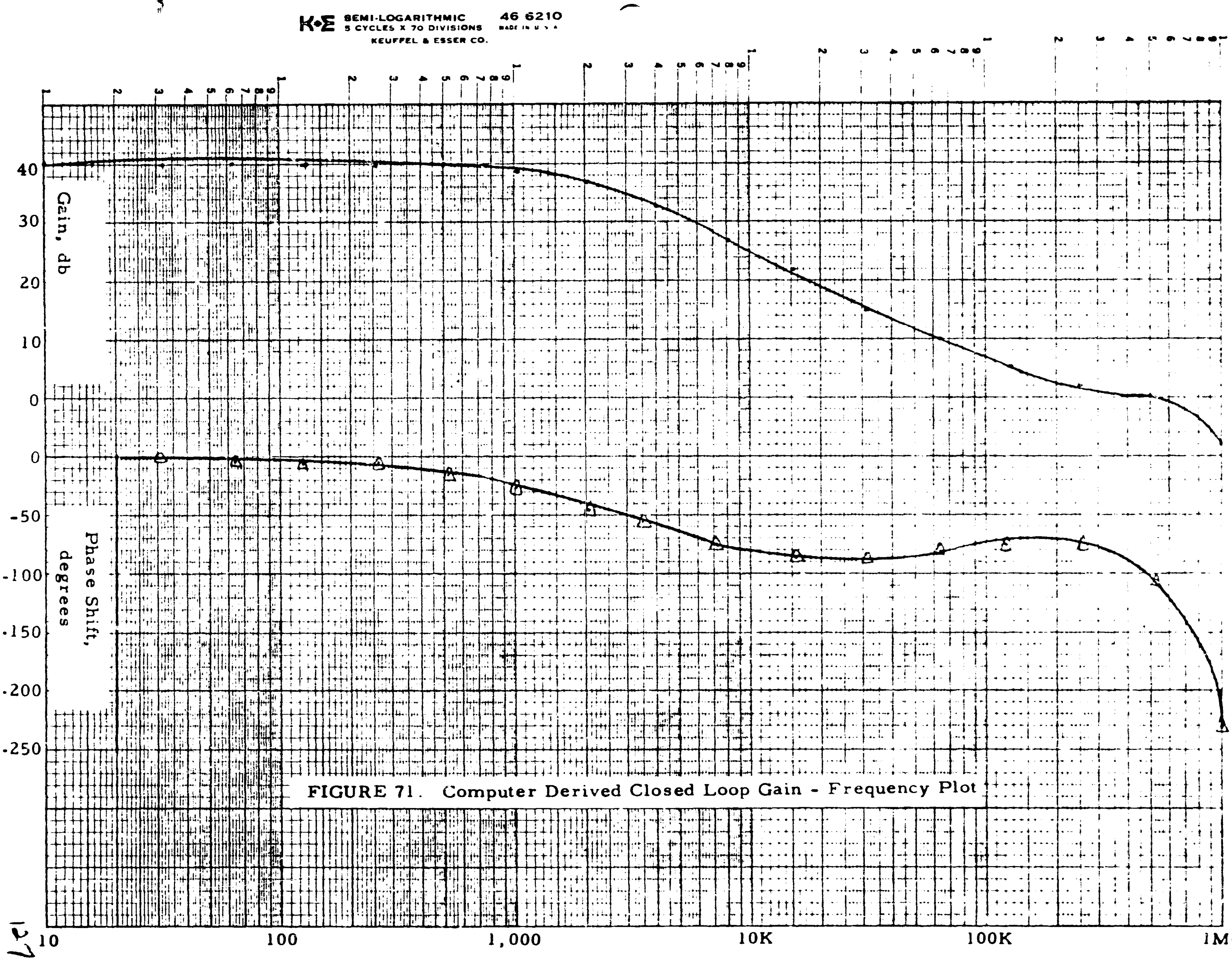

FIGURE 71. Computer Derived Closed Loop Gain - Frequency Plot

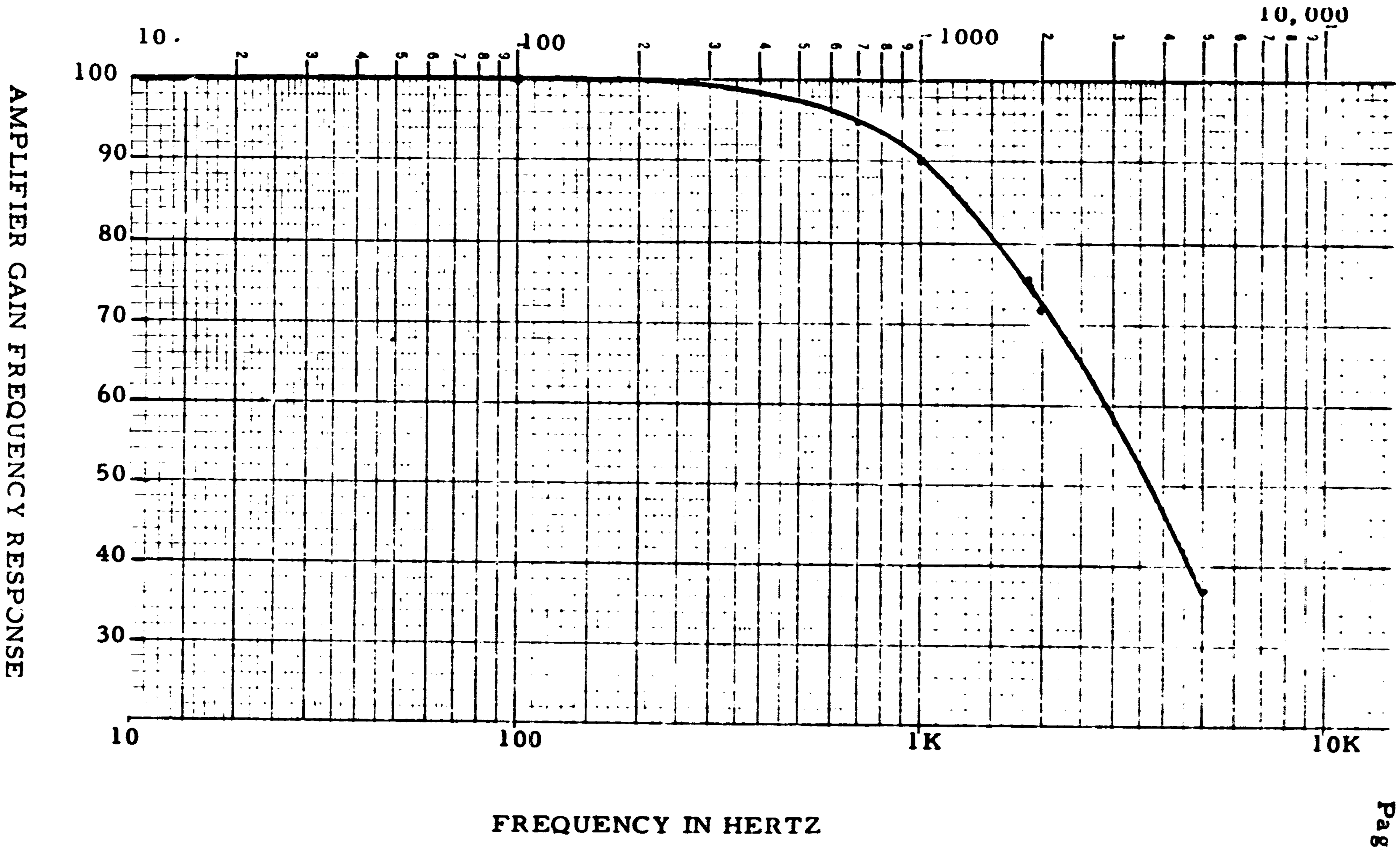

FIGURE 72 FREQUENCY RESPONSE CHARACTERISTIC CURVE

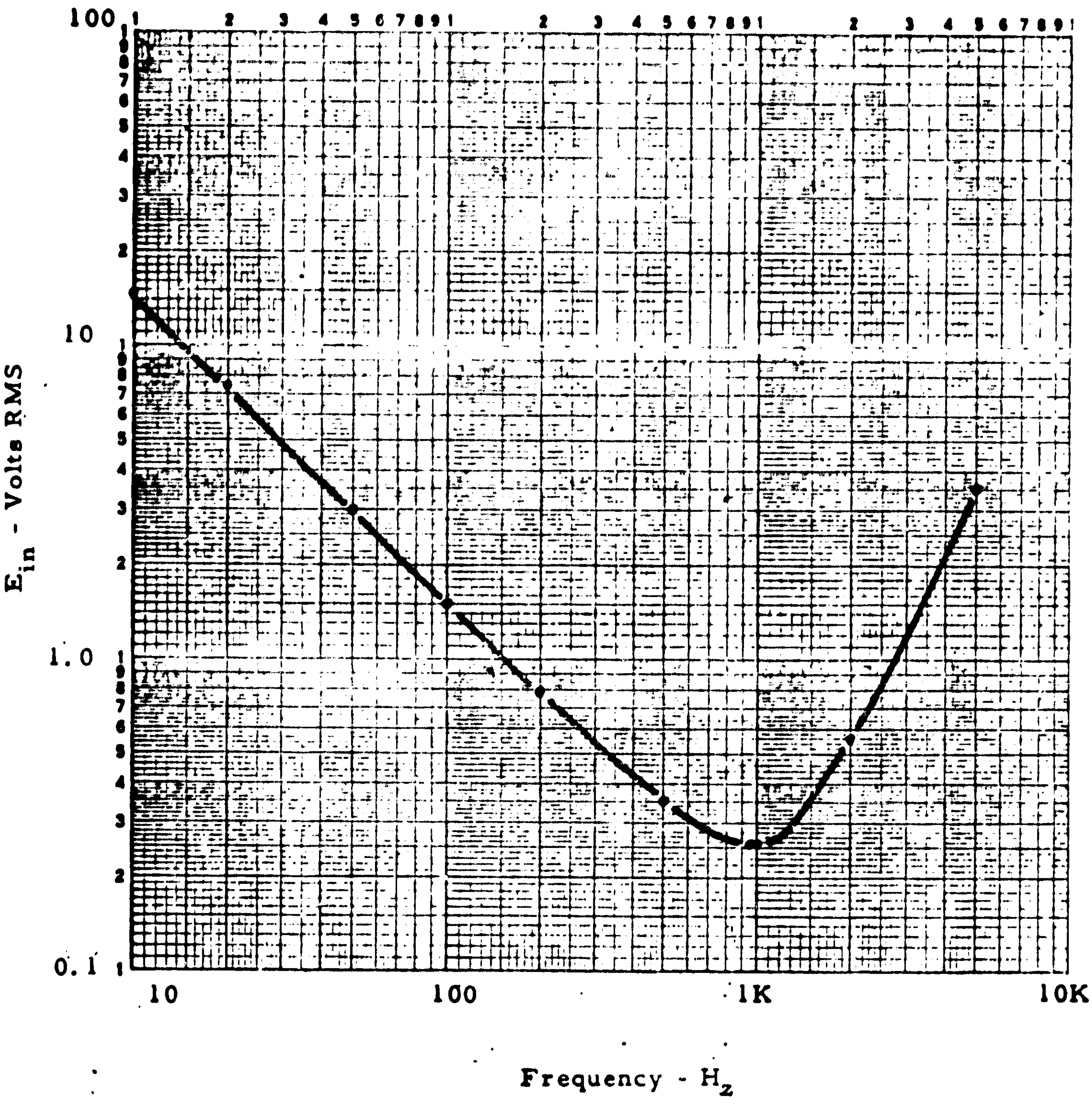

Figure 73
Frequency Response of Search Coil and Preamplifier Combination

The output signal is coupled back to the input FET's gate No. 2 via the feedback network R2, C, and R1 thus closing the loop.

The amplifier is dynamically stable even with an output load capacity of 0.1µf. Production unit test data showed that the amplifier can deliver into a load of 0.01µf in parallel with 50K Ω sine wave voltage of 20 volts peak to peak with no distortion at a frequency of 1KHz.

The quiescent DC output voltage is given by the intrinsic gate to gate offset DC voltage of the input FET multiplied by the closed loop gain (101). Thus the DC output voltage offset will be between ± 1.0 volts. Typical DC output voltage drifts with temperature are 14MV p-p from -50°C to +60°C.

The preamplifier output voltage is DC coupled in the OGO-F instrument into the 400 Hz notch filter in the main body electronics. The -3db closed loop frequency response is 1,850 Hz as shown in Figure 72.

The output, power supply and ground lines in the sensor-preamplifier assembly are RFI filtered with Allen-Bradley ferrite filters.

A brief analysis of the amplifier and feedback network is shown on the following pages. The transfer function is derived.

5.2.1 Analysis of Signal to Noise Characteristics

For the purpose of this analysis, the magnetic signal is considered to have a uniform γ/second amplitude distribution (this assumption seems valid based upon most wideband natural phenomena). The voltage induced into a search coil is the time derivative of the magnetic field. The considered signal voltage amplitude spectrum is therefore a "white" distribution. The output voltage of a practical search coil (assuming near critical dampening) is of essentially constant distribution below resonance and diminishes as the reciprocal of the square of the frequency (12 db per octave) above resonance. The sensitivity of a search coil is the induced voltage produced by the ambient magnetic field. Sensitivity, therefore, has the units of microvolts per γ per second.

The impedance of a practical search coil appears resistive at very low frequencies and up to the frequency where the inductive reactance is equal to the resistance (about 8 Hz) at resonance; and essentially as a capacitive reactance beyond resonance. The noise generated by the probe is a thermal noise produced by the real part of the probe impedance. The amplitude of this noise voltage is proportional to the 1/2 power of the real part of the impedance which is simply the winding resistance at low frequencies. At a frequency where the inductive reactance is equal to the geometry mean of the winding and dampening resistances, the real part of the impedance increases as a second power of frequency (12 db per octave) until resonance. After resonance the real part of the probe impedance decreases as the second power of frequency (-12 db per octave). The voltage noise spectrum, therefore, is essentially constant until the frequency where the inductance is equal to the geometric mean of the winding and dampening resistances (about 75 Hz). It then increases at 6 db per octave to resonance and then diminishes inversely with frequency (-6 db per octave).

Analysis 1

General Analysis

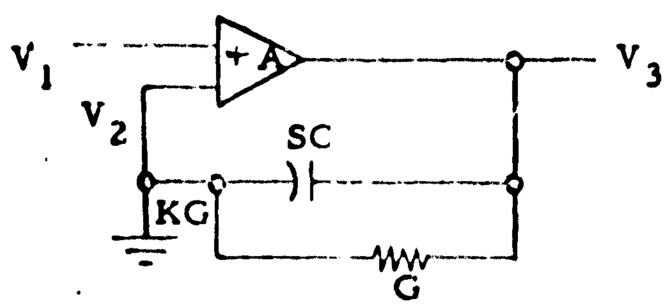

R 2 = 100 R1

$$\frac{1}{R2} = G$$

$$\frac{1}{R1} = -\frac{100}{R2} = 100\ G$$

Calculating gain:

$$A\ (V_1 - V_2) \cdot V_3$$

$$A\ V_1 - A\ V_2 = V_3$$

$$V_2\ (KG + G + SC) + V_3\ (-G - SC) = 0$$

$$V_2 = \frac{V_3\ (G + SC)}{G\ (1 + K) + SC}$$

$$AV_1 - A\left[\frac{V_3\ (G + SC)}{G\ (1 + K) + SC}\right] = V_3$$

Analysis 2

$$AV_1 = V_3 + V_3 \frac{A\,(G + SC)}{G\,(1 + K) + SC}$$

$$\therefore V_1 = V_3 \left[1 + \frac{A\,(G + SC)}{(1 + K)\,(G) + SC} \right]$$

$$\frac{V_3}{V_1} = \frac{A}{1 + \frac{A\,(G + SC)}{(1 + K)\,G + SC}}$$

$$\frac{V_3}{V_1} = \left[\frac{1}{\frac{G + SC}{(1+K)\,G + SC} + \frac{1}{A}} \right]$$

$$\frac{V_3}{V_1} = \left[\frac{(1+K)\,G + SC}{G + SC + \frac{(1+K)\,G + SC}{A}} \right] \frac{R_2}{R_2}$$

$$\frac{V_3}{V_1} = \frac{1 + K + SCR_2}{1 + SCR_2 + \frac{1 + K + SCR}{A}}$$

Since

$A >> 1 + K + SCR_2$

Therefore

$$\frac{V_3}{V_1} = \frac{1 + SCR_2}{1 + SCR_2} + \frac{K}{1 + SCR_2}$$

$$\frac{V_3}{V_1} = \text{GAIN} = 1 + \frac{K}{1 + SCR_2}$$

Analysis 3

$$\text{GAIN} = 1 + \left[\frac{K}{1 + SCR_2}\right] = 1 + \left[\frac{K_1}{1 + T_1 S}\right] = \text{GAIN}$$

When K = 100

C = 830 pf

R = 100K

$T_1 = RC = (830\ \text{pf})\ (0.1\text{M}) = 830 \times 10^{-12} \times 10^{-5} = 830 \times 10^{-7} = 83 \times 10^{-6}$

$$f_{3db} = \frac{0.1592}{T} = \frac{0.1592}{83 \times 10^{-6}} = \frac{159.2}{83}\ \text{KH}_z$$

$f_{3db} = 1.92$ KHz

$$\text{DC Gain} = 1 + \frac{K_1}{1 + 0} = 1 + K_1 = 1 + 100 = 101$$

DC Gain = 101

But $K_1 = 100$

Thus

$$\text{Gain} \cong \frac{101}{1 + T_1 S}$$

Where $T_1 = 83 \times 10^{-6}$ sec.

The preamplifier amplifies both the probe signal and probe noise and at the same time adds additional noise. To minimize the total system noise, it is necessary to carefully analyze the effects from all sources as a function of the sensor characterisitcs.

Noise analysis have been made by several people in this general area in which they considered simply the winding resistance and amplifier noise figure with respect to the winding resistance. A detailed analysis has been performed which shows that this method can yield completely erroneous results. Additional erroneous results can occur by making laboratoty tests in which the sensor itself is not used because of the susceptibility to background magnetic disturbances. Replacement of the sensor by a resistor equivalent tothe winding resistance is not a valid technique.

5.2.2 Reactive Sensor and Transistor E-I Noise Generator Model

A detailed analysis has been carried out taking into account both the resistive and reactive elements of the sensor and the correlated voltage noise generator (E) and current noise generator (I) representation for the transistor noise constituents. This analysis is included in Appendix B.

The analysis in which typical values were chosen for the sensor along with a premium state-of-the-art FET should serve as a reasonable analytical approach for most systems of this nature - a long core with small cross sectional area, many thousand of turns, a self-resonant frequency in the high hundredths of Hz to low kilo Hz region.

The analysis shows three regions with distinct characteristics of the system noise. The first region is characterized by excessive noise of a 1/f nature produced by the transistor voltage noise generator. The mid-region where noise is lowest is due to about equal transistor voltage noise and probe thermal noise. In the third region the thermal noise dominates. The latter mechanism is paramount from well below resonance to much higher frequencies above resonance. On rather interesting conclusion is that transistor noise is negligible about 100 Hz. Figure 74 summarizes the noise as determined by the analysis.

5.2.3 Sensor - Preamplifier Optimization

The two noise regions at low and high frequencies are the consequences of two separate mechanisms. The low frequency noise is all due to transistor noise and, as such, is completely independent of the sensor characteristics. The high frequency noise is the thermal noise generated by the sensor and is completely independent of the amplifier. The thermal noise is, in fact, predominately due to the sensor inductance.

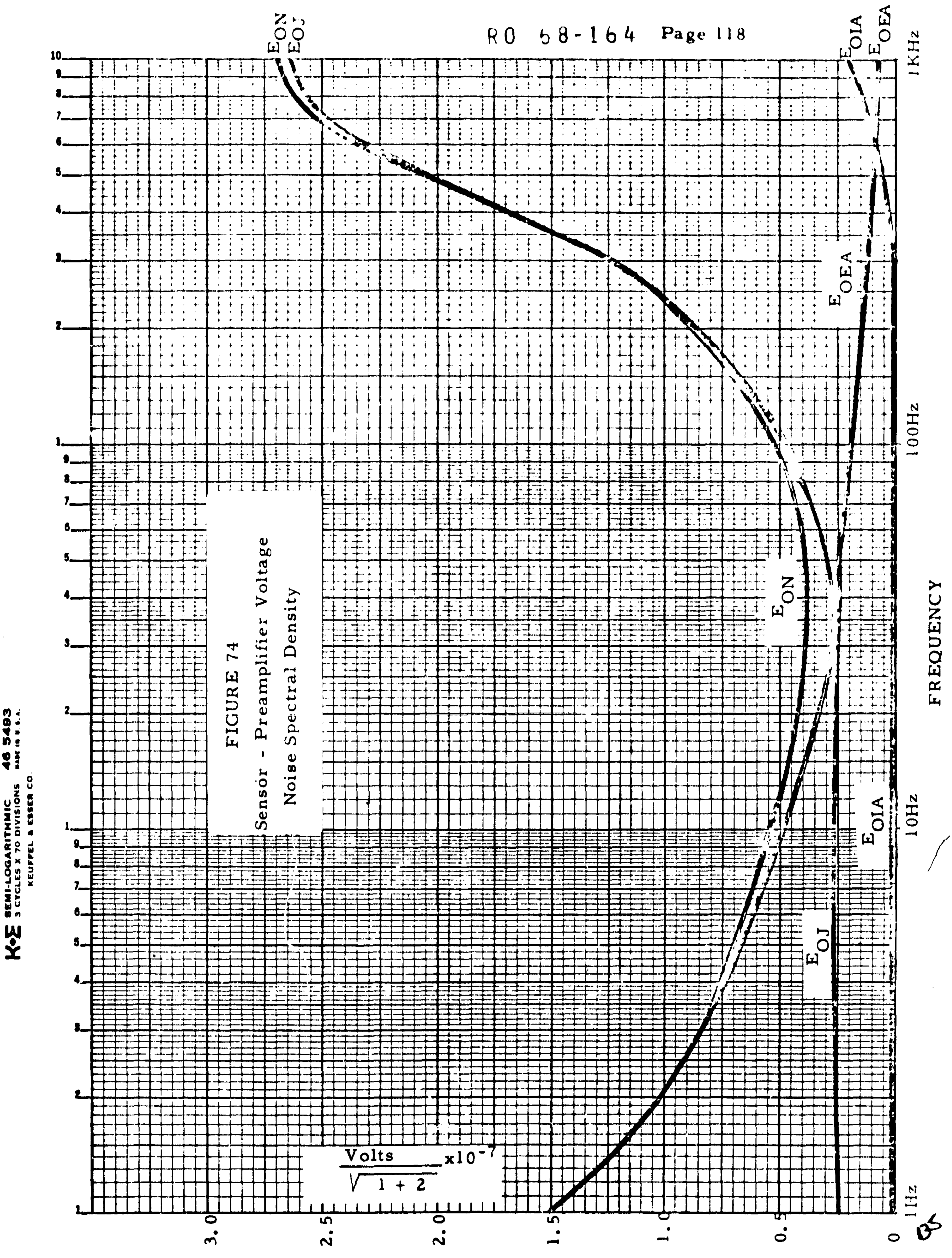

FIGURE 74
Sensor - Preamplifier Voltage
Noise Spectral Density

5.3 Proportional Heater

The proportional heater circuit consists of a temperature sensitive element, thermistor RT1, which decreases approximately 5%/°C. Refer to Figure No. 75. Assume that RI1 is at a temperature of $+4^{o}C$; the resistance of RT1 is 27.1KΩ and the voltage at E4 is approximately zero volts. This voltage is sampled and amplified by the differential amplifier stage, Q1 and is buffered by the Darlington connected amplifier stage, Q2 and Q3. Essentially, the circuit power dissipation is determined by the product of 40 volts and the current through R8. If the ambient temperature changes downward, the resistance of RT1 increases, causing an increase current through R8, which means more power dissipation in R1, R9, R10, and R11. The temperature control of the sensor compartment is accomplished by the feedback system consisting of the amplifier circuit and the heat transfer characteristics of the compartment. As the power dissipated in the circuit increases, the compartment temperature will increase, forcing the resistance of RT1 to decrease and thus reducing the circuit power dissipation. The end result is that, for ambient temperature below $+40^{o}C$, the sensor compartment will reach a stable temperature of about $+40^{o}C$.

For the purpose of evaluating the circuit, assume V_{BE} of Q1, Q2, and Q3 to be 0.7 volts. At $+4^{o}C$ RT1 = 271.6K, for simplicity assume RT1 = 270 K ohm.

$$VR_2 = \frac{(20 + 20)\,R2}{R2 + RT1} = \frac{40 + 270K}{270K + 270K} = 20V$$

Since R2 is returned to -20V, the voltage at the base of Q1A will be zero volts. The base of Q1B is also biased to zero volts through R5.

$$VR_3 = VR_2 - .7 = 20 - .7 = 19.3 \text{ volt}$$

$$IR_3 = \frac{VR3}{R3} = \frac{19.3}{200K} = 96.5\mu A$$

At $+4^{o}C$ this current will divide equally between Q1A and Q1B collectors.

$$IR_6 = \frac{96.5}{2}\ \mu A = 48.2\mu A$$

$$VR_6 = IR_6 \times R6 = (48.2\mu A)\ 100K = 4.82V$$

$$VR_8 = VR_6 - 2 \times V_{BE} = 4.82 - 2 \times .7 = 3.42V$$

$$IR_8 = \frac{VR8}{R8} = \frac{3.42}{680} = 5 \text{ m.a.}$$

$$P = 40 \times IR_8 = 40 \times 5 \text{ m.a.} = 0.2 \text{ watt}$$

where P = power dissipation at the circuit. The voltage E4 is at approximately zero volts and steady state will be maintained as long as the thermistor remains at $+4^{o}C$.

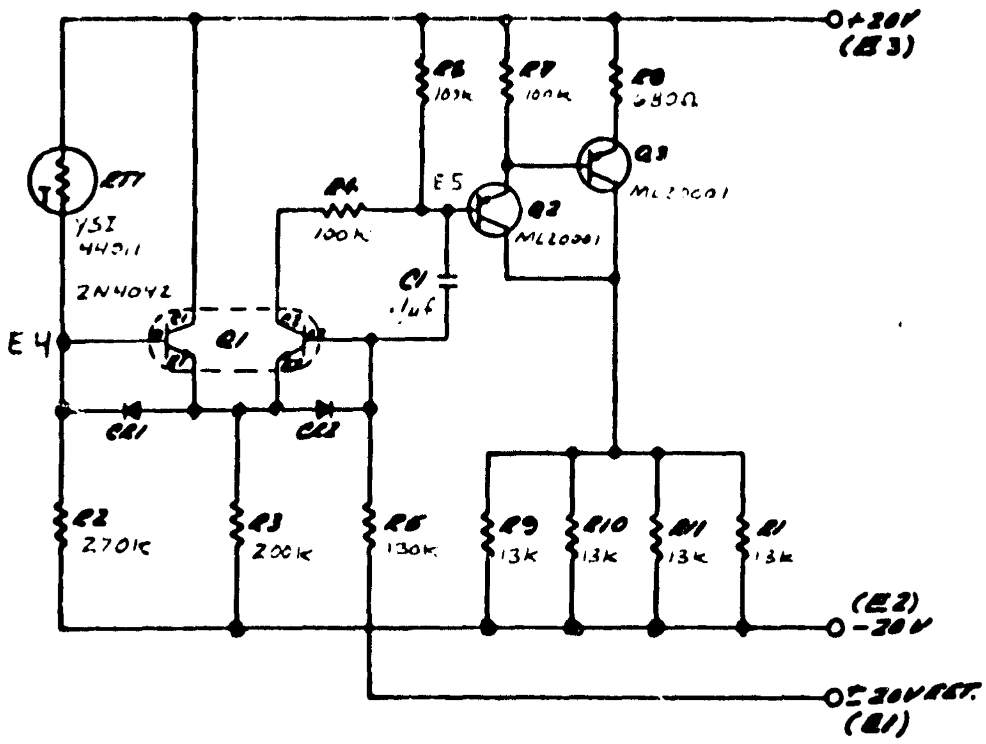

Thermistor Characteristics

RESISTANCE VERSUS TEMPERATURE -40°C to +150°C											
TEMP°C	RES Ω	TEMP°C	RES Ω	TEMP°C	RES Ω	TEMP°C	RES Ω	TEMP°C	RES Ω	TEMP°C	RES Ω
-40	3356K	-4	410.2K	32	73.32K	68	17.60K	104	5307	140	1914
39	3107K	3	389.2K	33	70.22K	69	16.97K	105	5147	141	1865
38	2911K	2	369.4K	34	67.26K	70	16.37K	106	4993	142	1817
37	2751K	-1	350.7K	35	64.46K	71	15.80K	107	4844	143	1770
36	2599K	0	333.1K	36	61.76K	72	15.25K	108	4700	144	1725
35	2440K	1	316.4K	37	59.19K	73	14.72K	109	4561	145	1681
34	2292K	2	300.6K	38	56.75K	74	14.21K	110	4427	146	1639
33	2154K	3	285.7K	39	54.42K	75	13.72K	111	4297	147	1598
32	2025K	4	271.6K	40	52.19K	76	13.25K	112	4172	148	1558
31	1904K	5	258.3K	41	50.07K	77	12.79K	113	4051	149	1519
30	1791K	6	245.7K	42	48.04K	78	12.36K	114	3933	150	1481
29	1685K	7	233.8K	43	46.11K	79	11.94K	115	3820		
28	1586K	8	222.5K	44	44.26K	80	11.54K	116	3711		
27	1494K	9	211.9K	45	42.50K	81	11.15K	117	3605		
26	1407K	10	201.7K	46	40.81K	82	10.78K	118	3502		
25	1326K	11	192.2K	47	39.20K	83	10.42K	119	3403		
24	1250K	12	183.1K	48	37.65K	84	10.09K	120	3307		
23	1179K	13	174.5K	49	36.18K	85	9746	121	3214		
22	1111K	14	166.3K	50	34.78K	86	9439	122	3124		
21	1049K	15	158.6K	51	33.44K	87	9117	123	3038		
20	989.8K	16	151.3K	52	32.16K	88	8871	124	2953		
19	934.6K	17	144.3K	53	30.92K	89	8536	125	2872		
18	882.7K	18	137.7K	54	29.74K	90	8261	126	2793		
17	834.0K	19	131.4K	55	28.61K	91	7996	127	2717		
16	788.2K	20	125.5K	56	27.53K	92	7741	128	2643		
15	745.2K	21	119.8K	57	26.50K	93	7496	129	2571		
14	704.7K	22	114.5K	58	25.50K	94	7257	130	2501		
13	666.7K	23	109.4K	59	24.56K	95	7030	131	2434		
12	630.9K	24	104.5K	60	23.65K	96	6810	132	2369		
11	597.3K	25	100.0K	61	22.77K	97	6599	133	2306		
10	565.1K	26	95.51K	62	21.94K	98	6393	134	2244		
9	535.6K	27	91.34K	63	21.14K	99	6195	135	2185		
8	507.5K	28	87.38K	64	20.37K	100	6005	136	2128		
7	481.0K	29	83.60K	65	19.63K	101	5821	137	2072		
6	456.0K	30	80.00K	66	18.93K	102	5642	138	2018		
-5	432.4K	31	76.58K	67	18.25K	103	5472	139	1965		

FIGURE 75. Proportional Heater Schematic

The transfer characteristic for the voltage across the parallel network (R_T) made up of R1, R9, R10, and R11 is

$$\frac{16.3 \text{ volts}}{^{\circ}C}$$

Since $P = E^2/R$ Let $R = R_T = \frac{13K}{4} = 3.38K$

$$\frac{P}{^{\circ}C} = \frac{(16.3)^2}{^{\circ}C} \cdot \frac{1}{3.38K} = \frac{80 \text{ mw}}{^{\circ}C}$$

Therefore the proportional bandwidth is

$$\frac{Pmax - Pmin}{80 \text{ mw}} \cdot {}^{\circ}C = \frac{475 \text{ mw}}{80 \text{ mw}} \cdot {}^{\circ}C = 6^{\circ}C$$

The exact operating temperature of the temperature sensor will be affected by the thermistor's exact value, its temperature coefficient, its dissipation constant, the exact value of R2, and the VBE match of Q1 A & B. The operation of the circuit will not, however, be altered and these effects are of a minor nature.

5.4 400 Hz Notch Filter

The function of this circuit is to attenuate 400Hz signal (Spacecraft Power Sync Frequency) component and pass with unity gain all other signals.

Figure 76 shows a schematic of the circuit.

Figure 77 shows a simplified equivalent circuit. On Figure 77 the input signal e_{in} passes through the symmetric parallel-T network (G) into a high gain amplifier (A) which is used as a follower, through the resistor attenuator network R1-R2 and back to the network G.

The transfer function is derived as follows:

First consider the following -

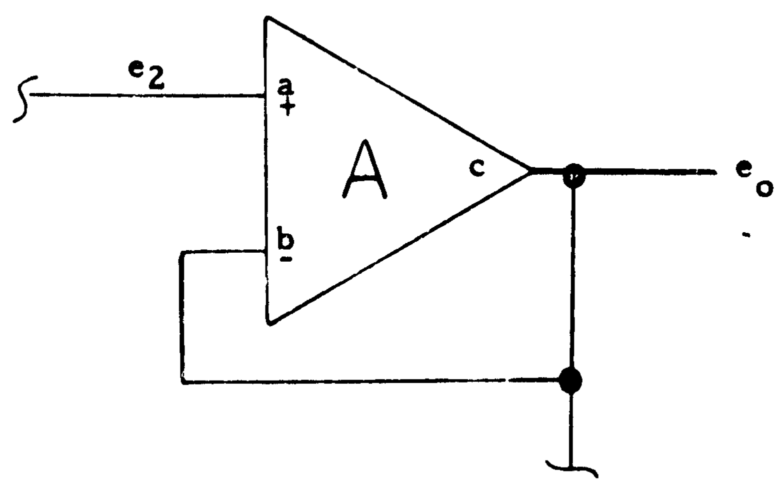

A is the gain of the differential amplifier

$$v_c = A\,(v_a - v_b)$$

thus $e_o = A\,(e_2 - e_o)$

$$e_o = A\,e_2 - A\,e_o$$

$$A\,e_2 = e_o + A\,e_o = e_o\,(1 + A)$$

$$\frac{e_o}{e_2} = \frac{A}{1 + A} = \frac{1}{1 + \frac{(1)}{A}}$$

$$\boxed{e_2 = e_o \left(1 + \frac{1}{A}\right)} \qquad (1)$$

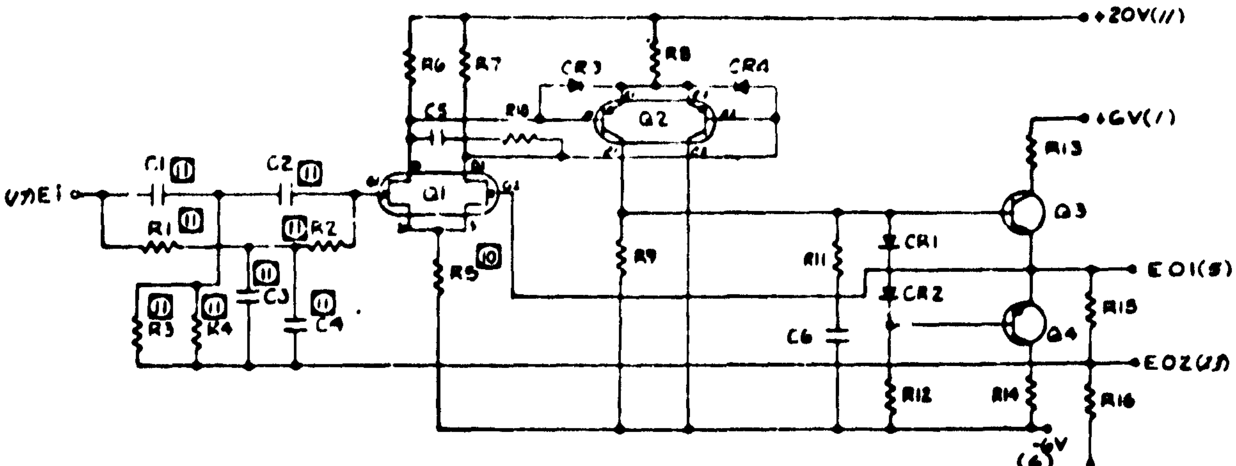

ELECTRONIC SCHEMATIC

(Reference [illegible]12-1)

C1 = C2 = C3 = C4 = 1200 pf ± 1%
C5 = 470 pf
C6 = 1000 pf
R1 = R2= R3 = R4= 332K ± 1%
R5 = Select
R6 = R7 = 40.2K
R8 = 16.9K
R9 = 10 Meg
R10 = 510 Ω
R11 = 1K
R12 = 47K
R13 = R14 = 200 Ω
R15 = 499Ω
R16 = 10K

Q1 = 2N3954
Q2 = 2N4024
Q3 = FM2484
Q4 = ML20001

Figure 76. 400 Hz Notch Filter Schematic

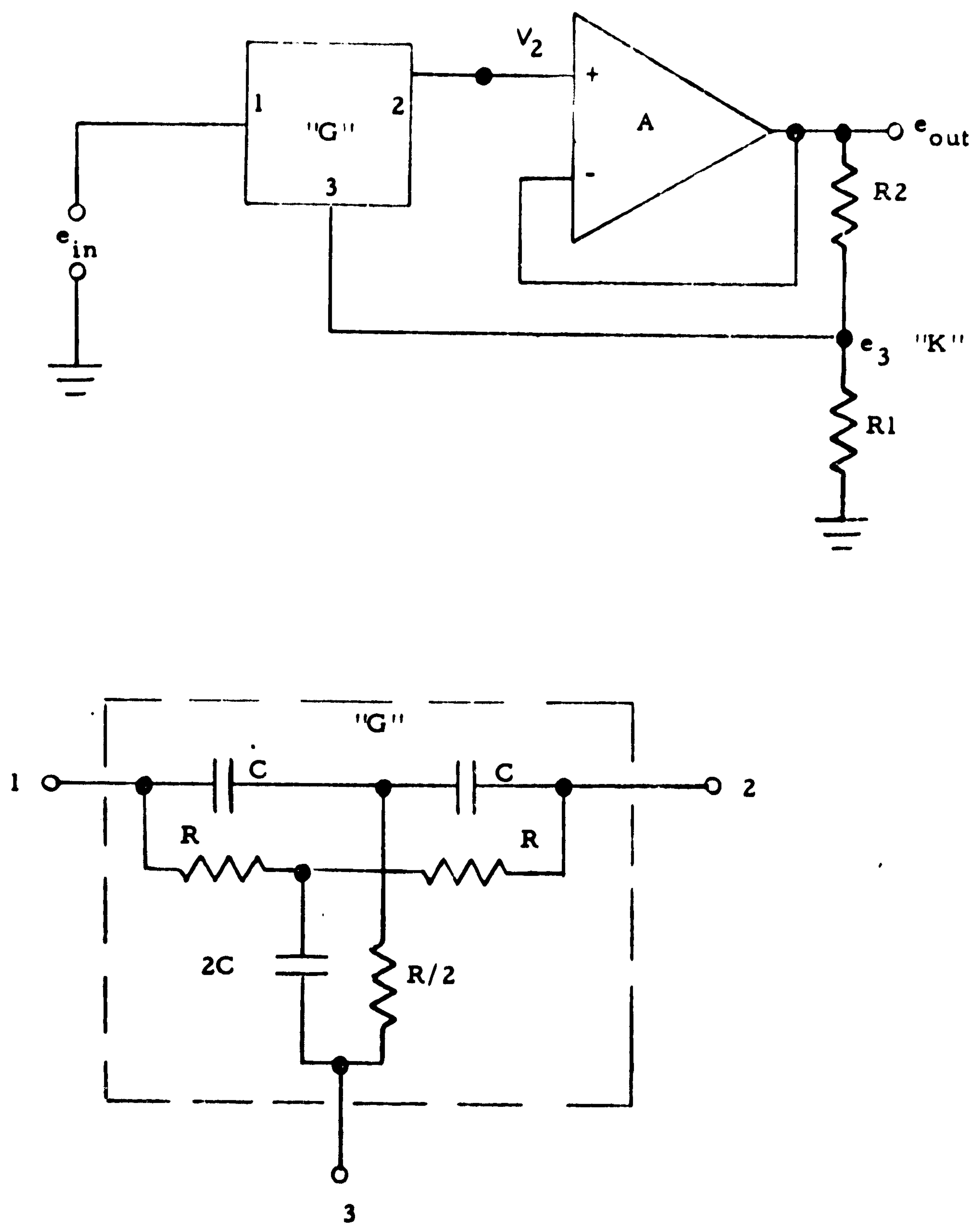

Figure 77. 400 Hz Notch Filter Equivalent Circuit

Now consider the K network:

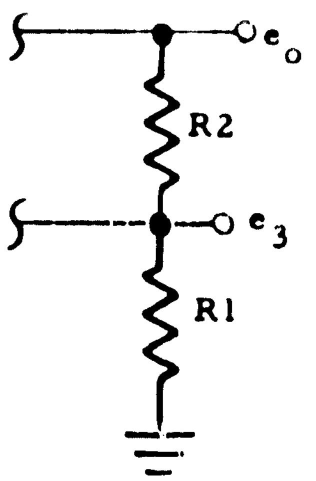

$$e_3 = \left[\frac{R1}{R1 + R2}\right] e_o$$

Let $K_o = \dfrac{R1}{R1 + R2}$

then $\boxed{e_3 = K_o\, e_o}$ - - - - (2)

Now consider the parallel T network:

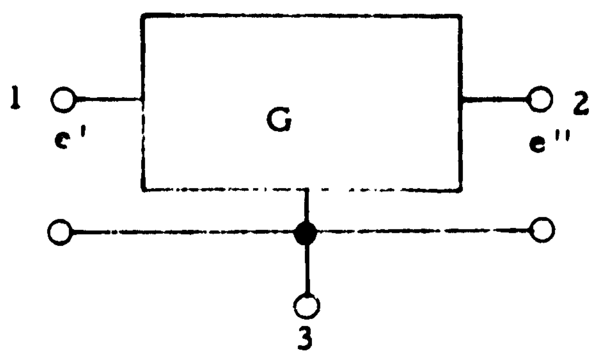

and let $G = \dfrac{e''}{e'} = \dfrac{e_2 - e_3}{e_1 - e_3}$.

$\boxed{e_1 = e_{in}}$ - (3)

Substitute equations 1, 2, and 3 in the expression for G, which yields:

$$G = \frac{\left[e_o\left(1 + \frac{1}{A}\right)\right] - \left[K_o\, e_o\right]}{\left[e_{in}\right] - \left[K_o\, e_o\right]}$$

AD 68-164

Solving for $\frac{e_o}{e_{in}}$ yields:

$$\boxed{\frac{e_o}{e_{in}} = \frac{1}{K_o + \left(\frac{1-K_o}{G}\right) + \frac{1}{AG}}} \quad \text{- - - - - - - - - - - - - - - -} \quad (4)$$

The transfer function for G as given in "Feedback Control System Analysis and Synthesis" by D'Azzo + Houpis (page 577) is:

$$G = \frac{1 - \omega^2 R^2 C^2}{1 - \omega^2 R^2 C^2 + j\, 4\, RC\omega}$$

which reduces to:

$$\boxed{G = \frac{1 - T_7^{\,2} S^2}{1 + K_1 T_7 S - T_7^{\,2} S^2}} \quad \text{- - - - - - - - - - - - - - - - -} \quad (5)$$

Substituting equation 5 into 4 yields:

$$\frac{e_o}{e_{in}} = \frac{1 - T_7^{\,2} S^2}{1 + (1-K_o) K_1 T_7 S - T_7^{\,2} S^2 + \left(\frac{1 + K_1 T_7 S - T_7^{\,2} S^2}{A}\right)}$$

Let $\alpha = \left(\frac{1 + K_1 T_7 S - T_7^{\,2} S^2}{A}\right)$ if A is in

the form of $A = \frac{K_2}{1 + S T_2}$

and $A >> 1$, $T_2 \ll T_7$, then $\alpha \Rightarrow 0$

then:

$$\frac{e_o}{e_{in}} = \text{Closed Loop Gain} = \frac{1 - T_7{}^2\, S^2}{1 + (1 - K_o)\, K_1 T_7 S - T_7{}^2 S^2}$$

for values used:

$$T_7 = RC = (332K)\,(1200\ \text{pf})$$

$$T_7 = 3.32 \times 10^5 \times 1.2 \times 10^{-9} = 3.98 \times 10^{-4}$$

$$T_7 = 398\ \mu\text{sec.}$$

$$f_1 = \frac{1}{2\pi RC} = \frac{0.1592}{398\ \mu\text{sec.}} = 400\ \text{Hz}$$

$$K_1 = 4$$

$$K_o = \frac{R_1}{R_1 + R_2} = \frac{10K}{10K + 499} = 0.953$$

$$K_2 = (1 + K_o)\, K_1 = (1 - 0.953)\,(4) = 0.188$$

$$\boxed{\text{Closed Loop Gain} = \frac{1 - T_7{}^2\, S^2}{1 + K_2\, T_7\, S - T_7{}^2\, S^2}} \quad \text{- - - - - - - - - -(6)}$$

$$\zeta = \frac{0.188}{2} = 0.094$$

From "Feedback Control Systems Analysis and Synthesis", page 294

$\zeta = 0.094$ db peak = 14 db

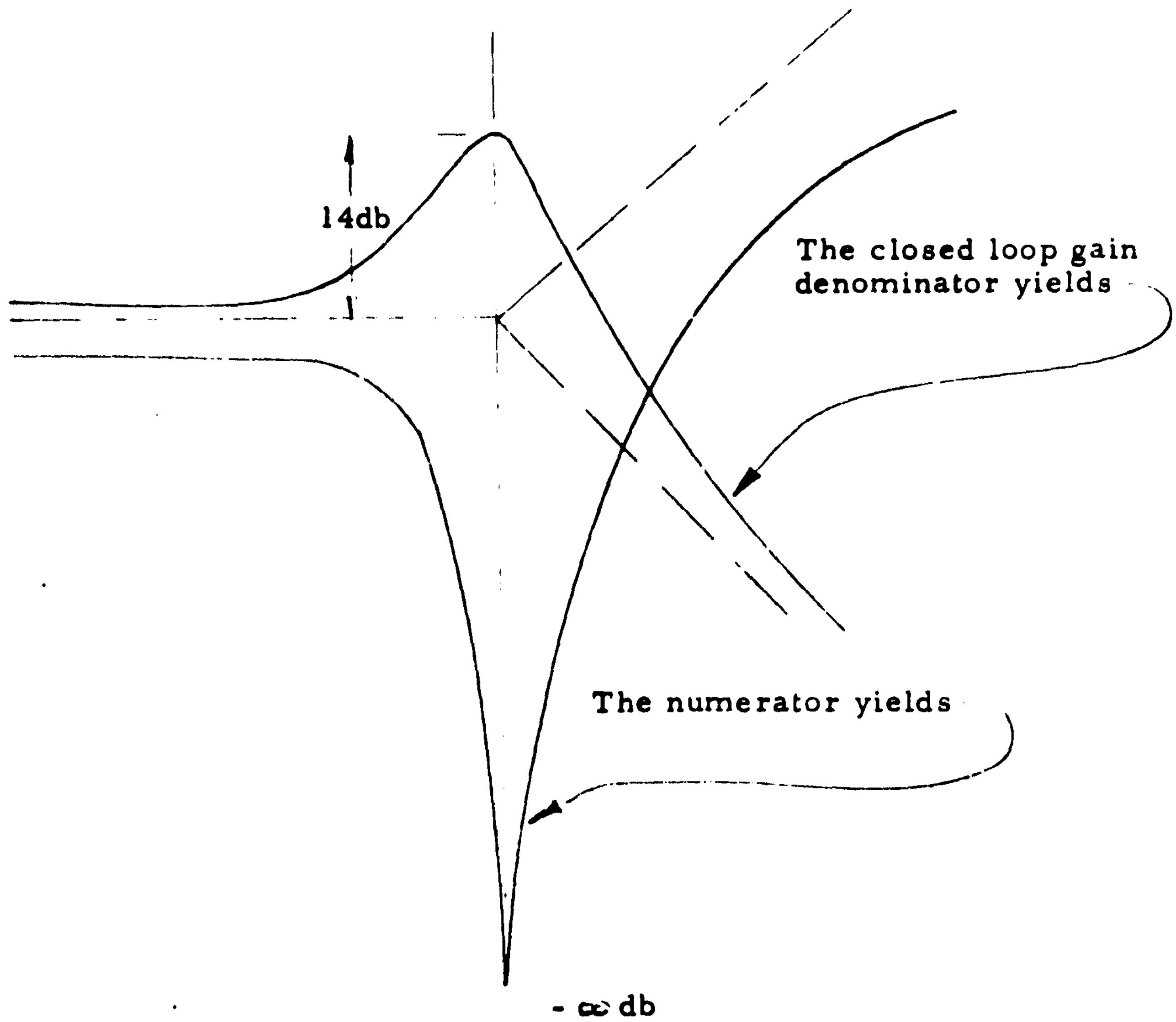
14db
The closed loop gain
denominator yields
The numerator yields
- ∞ db

Yielding:

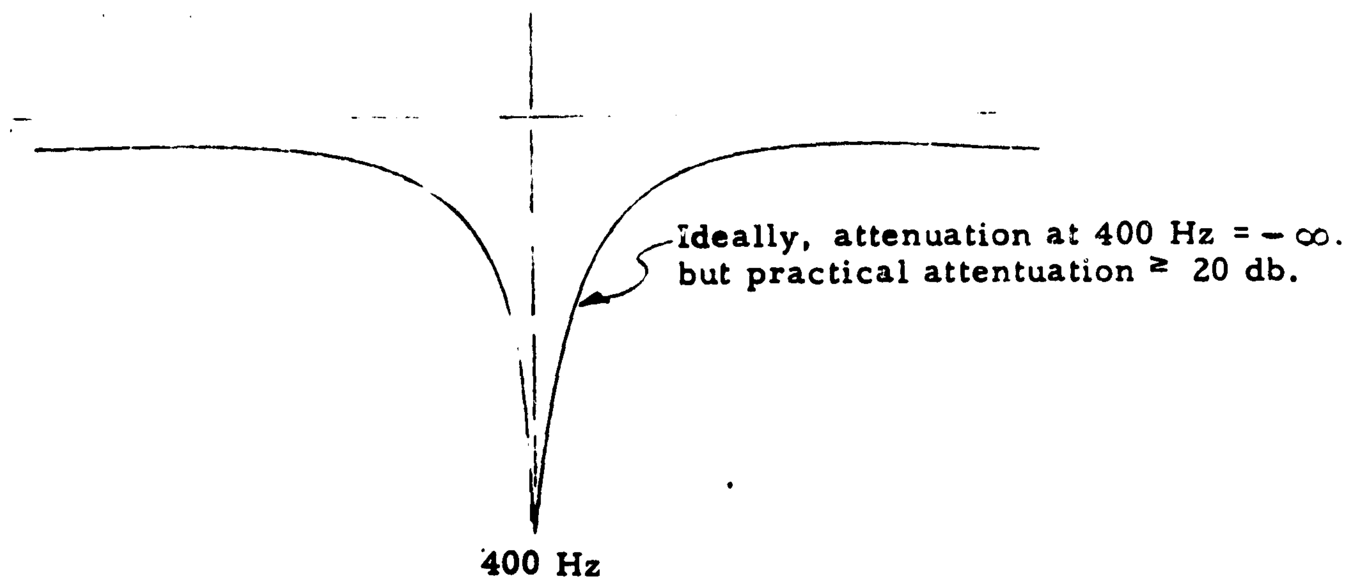
Ideally, attenuation at 400 Hz = - ∞.
but practical attentuation ≥ 20 db.
400 Hz

Figure 78 is a plot of measured test data of the 400 Hz Notch Filter Frequency Response. Using equation No. 6, page 127, as the transfer characteristic for the 400 Hz filter, a computer derived frequency response was run. The results are tabulated on page 131, for $K2 = .188$, $T7 = .398 \times 10^{-3}$ and $S = j\omega$. Note that in the computer print out, page 131, that "E-X" is read as "ten to the minus X," i.e., -6.765 E-2 is equal to -0.06765 db.

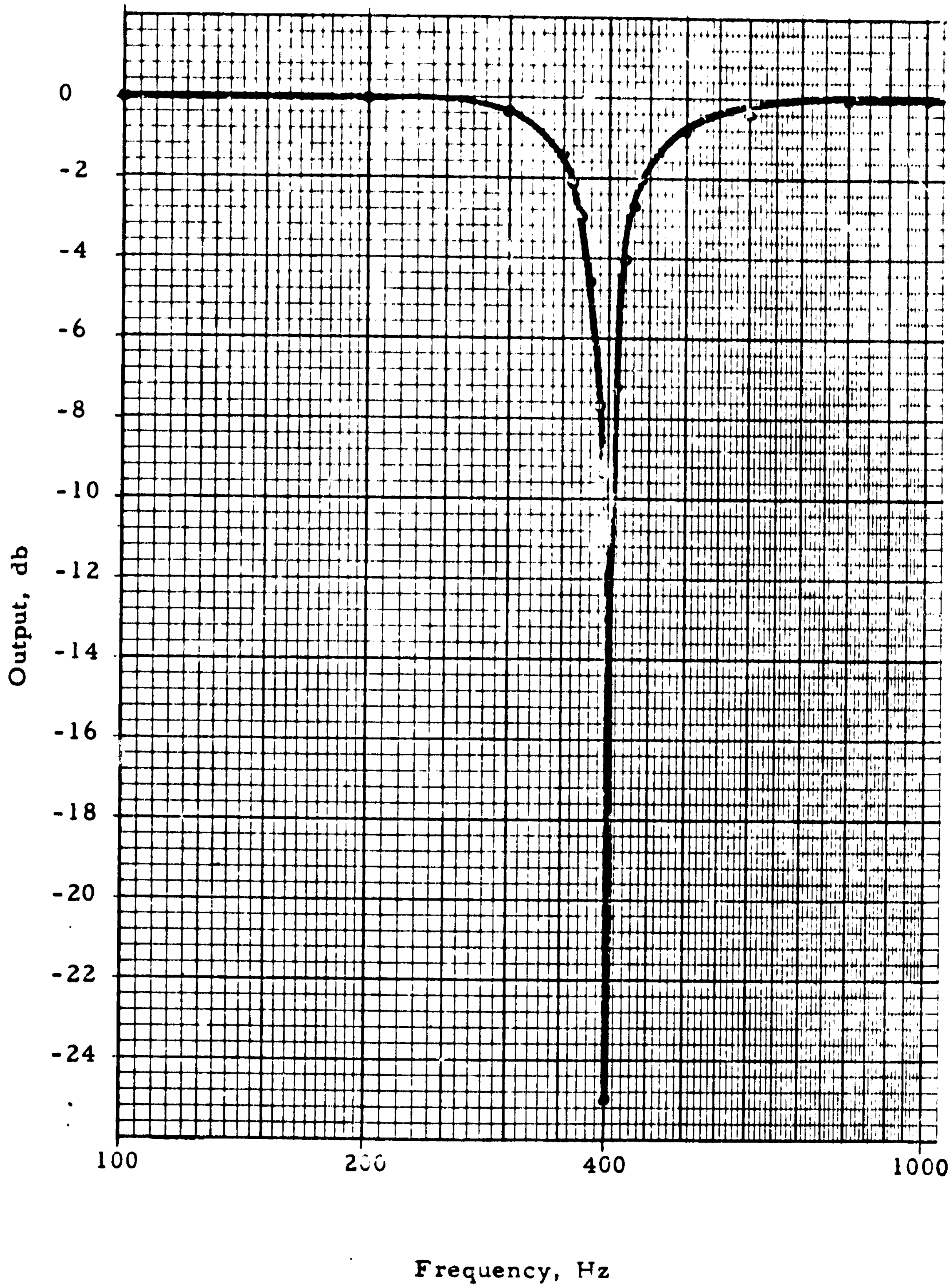

Figure 78. 400 Hz Filter Measured Frequency Response

X0 68-164

NOTCH 11:54 LA THU 10/12/67

OGO F 22 SEARCH COIL
400 HZ NOTCH FILTER
THEORETICAL FREQUENCY RESPONSE

ROBERT J NAHABIT

FREQUENCY	NOTCH GAIN	DB
1	1.	-9.93518 E-7
2	1.	-3.86907 E-6
5	.999997	-2.40141 E-5
10	.999989	-9.59997 E-5
20	.999956	-3.85340 E-4
50	.999715	-2.47224 E-3
100	.998745	-1.08925 E-2
200	.99223	-6.76537 E-2
300	.9517	-.429362
350	.817936	-1.74303
364.03	.707421	-3.00199
390	.257382	-11.771
395	.129704	-17.7147
397	7.68496 E-2	-22.2542
399	2.36114 E-2	-32.4894
400	3.01106 E-3	-50.3509
401	2.95607 E-2	-30.5404
403	8.22221 E-2	-21.6681
405	.133951	-17.4352
410	.256814	-11.7901
439.28	.707459	-3.00152
450	.783035	-2.12124
500	.922889	-.695978
700	.987529	-.108343
1000	.99602	-3.45896 E-2
1850	.999093	-7.87329 E-3
2461	.999508	-4.26715 E-3
3000	.999675	-2.82177 E-3

5.5 Variable Low Pass Filter and Buffer

The Variable Low Pass Filter determined the upper frequency response or bandwidth of the waveform channel. Figure 79 illustrates the schematic of the filter, and of the buffer which drives it. Q1 through Q4 of the filter acts simply as a switch. Note that they are utilized in the inverted mode in order to reduce the saturation resistance and offset.

The transfer characteristic of the filter takes the form of:

$$\frac{e_o}{e_{in}} = \frac{1}{1 + T\,S}$$

where T is a function of which switch (transistor) if any is closed. Table I illustrates the five possible conditions.

TABLE I

VARIABLE LOW PASS FILTER BANDWIDTH CONTROL

Bandwidth Hz	T Sec	Switch Status Q1	Q2	Q3	Q4
4	$T_1 = 40 \times 10^{-3}$	open	open	open	closed
8	$T_2 = 20 \times 10^{-3}$	open	open	closed	open
16	$T_3 = 10 \times 10^{-3}$	open	closed	open	open
32	$T_4 = 5.0 \times 10^{-3}$	closed	open	open	open
64	$T_5 = 2.5 \times 10^{-3}$	open	open	open	open

Figure 80 is a plot of measured test data of the Variable Low Pass Filter.

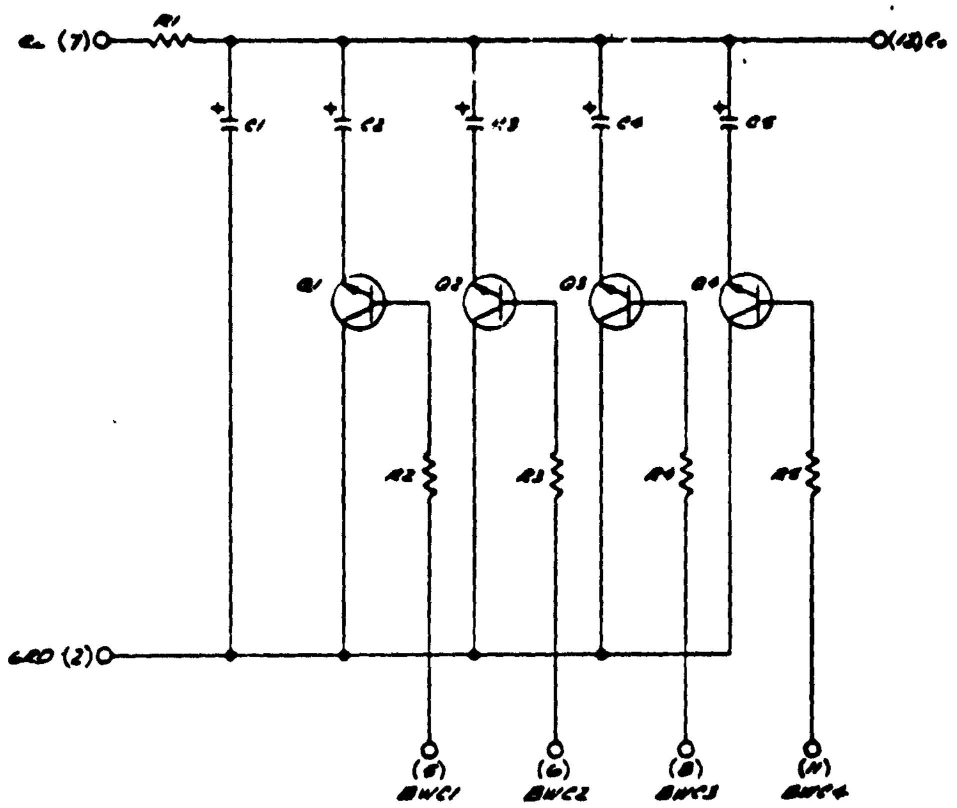

Variable Low Pass Filter

(Reference W4522-1)

C1 = C2 = 0.018 μf
C3 = 0.056 μf
C4 = 0.12 μf
C5 = 0.27 μf

Q1 thru Q4 = FM3300
R1 = 137K
R2 thru R5 = 43K

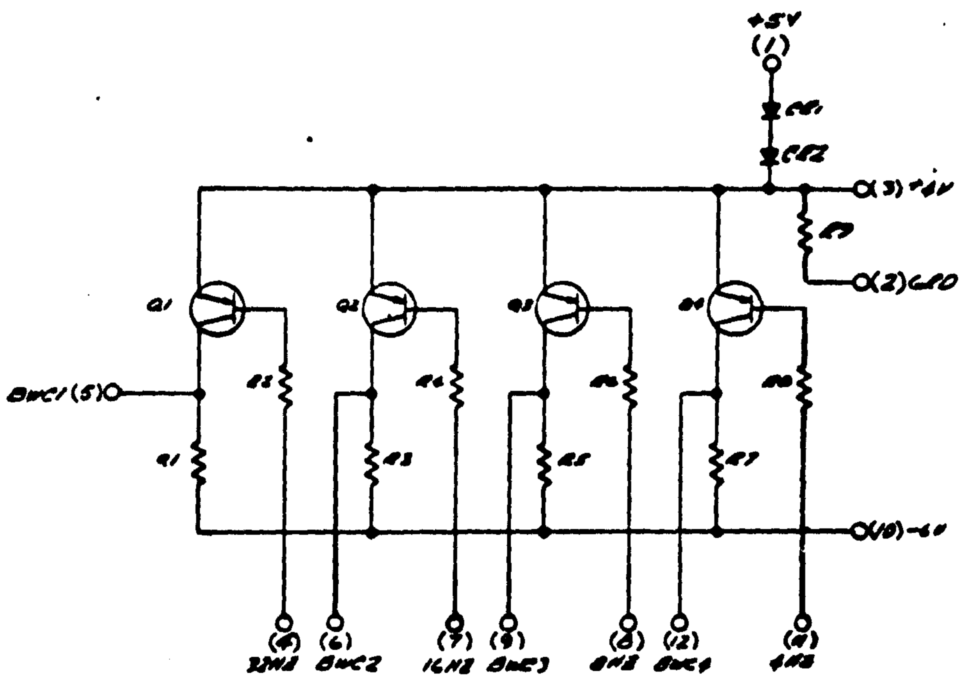

Buffer

(Reference W4523-1)

R1 = R3 = R5 = R7 = 91K
R2 = R4 = R6 = R8 = R9 = 43K

Q1 thru Q4 = ML 20001

FIGURE 79.

Variable Low Pass Filter and Buffer Schematic

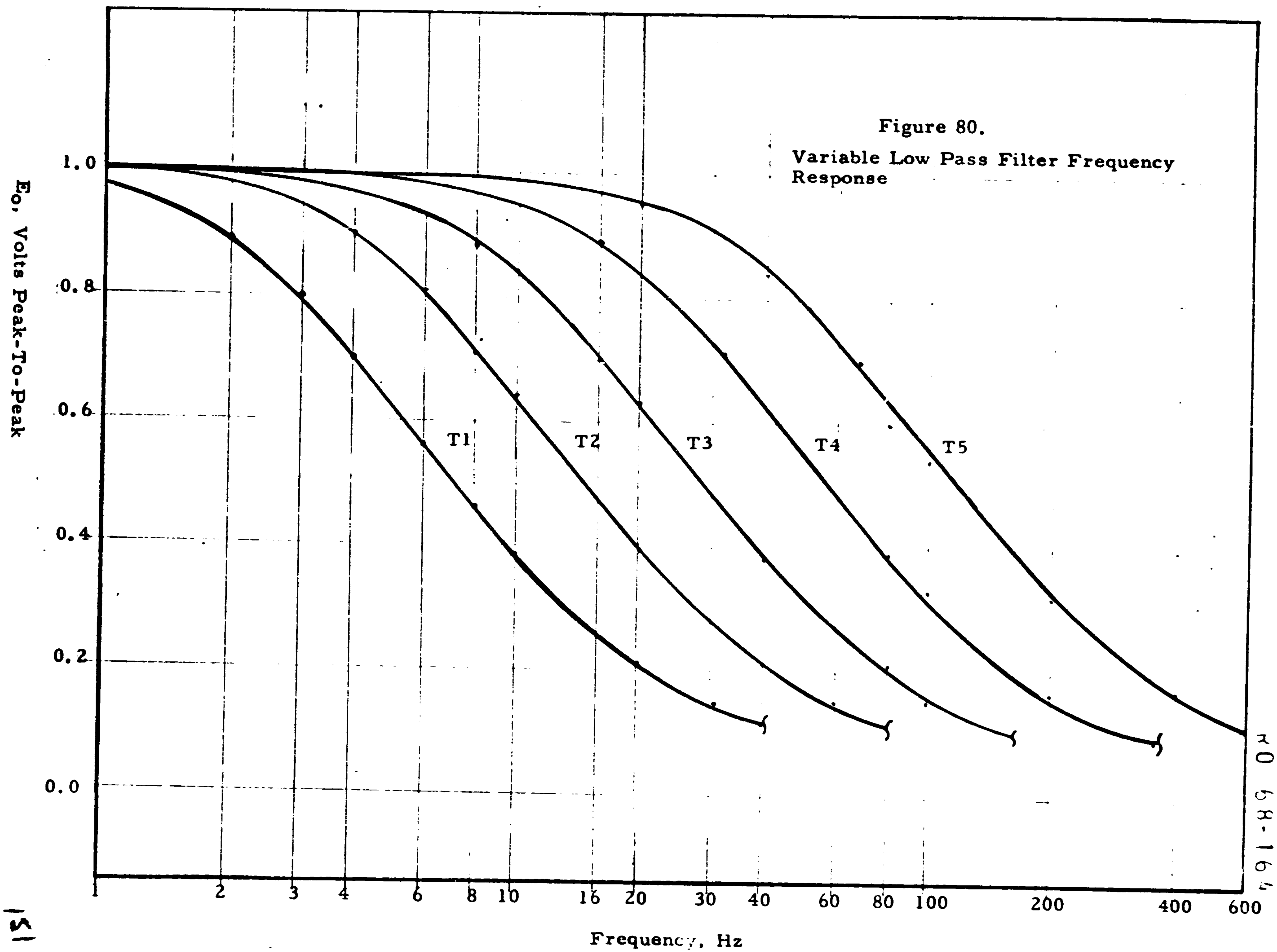

Figure 80.
Variable Low Pass Filter Frequency Response

5.6 Gain Change and Fixed Gain Amplifiers

Figure 81 is a detailed schematic diagram of both the Gain Change and Fixed Gain Amplifiers. Figure 82 is a simplified equivalent circuit. Q1 is a matched pair of N-channel field effect transistors used in a differential amplifier circuit to optimize the thermal stability of the bias current. Resistors R4 and R5 are selected to equalize the drain currents in Q1. Q1 has a nominal voltage gain of 2.5 and drives differential amplifier Q3 and Q4. Q3 and Q4 are selected for matched characteristics for maximum bias point temperature stability. The voltage gain of Q3 and Q4 is nominally 400. Isolation amplifier Q5 is operated in the emitter follower mode and has essentially unity gain. The open loop gain, being the product of the gains of the individual stages, is nominally 10^3. Closed loop gain is determined by the ratio of R11 to the parallel combination of R7 and R8 when control transistor Q2 is "off", and by the ratio of R11 to the parallel combination of R7, R8, R9, and R10 when the control transistor Q2 is "on". R14, C1, R15, and C2 form a filter network that prevents high frequency oscillations inherent in high gain amplifiers. The gain change amplifier is characterized by a very high input impedance, low output impedance, stable gain change, and very good gain stability over the temperature range of -15°C to +60°C.

5.6.1 Gain Change Amplifier

Refer to Figure 82. The gain is determined by the feedback resistors R11 and the parallel combination of R7 through R10.

In the Low Gain State, S1 is opened which removes R9 || R10 thus the gain is given by:

$$\text{Gain}_{\text{Low}} = 1 + \frac{R11}{R7 \parallel R10}$$

Typical values are:

R11 = 40.2K

R7 || R8 = 40.2K

R9 || R10 = 2.23K

$$\text{Gain}_{\text{Low}} = 1 + \frac{40.2K}{40.2K} = 1 + 1 = 2$$

$$\boxed{\text{Gain}_{\text{Low}} = 2.0}$$

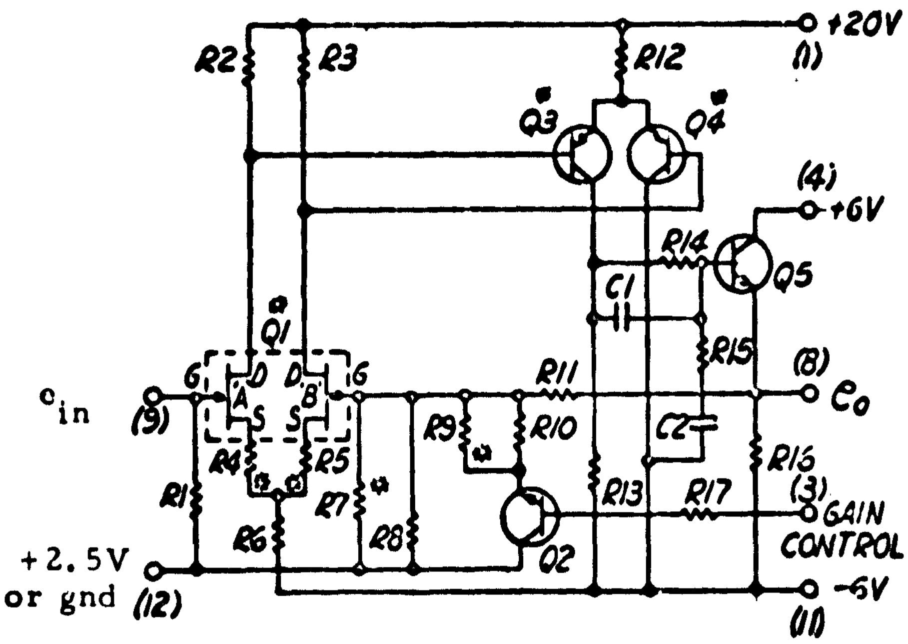

Gain Change Amp
(reference W4316)

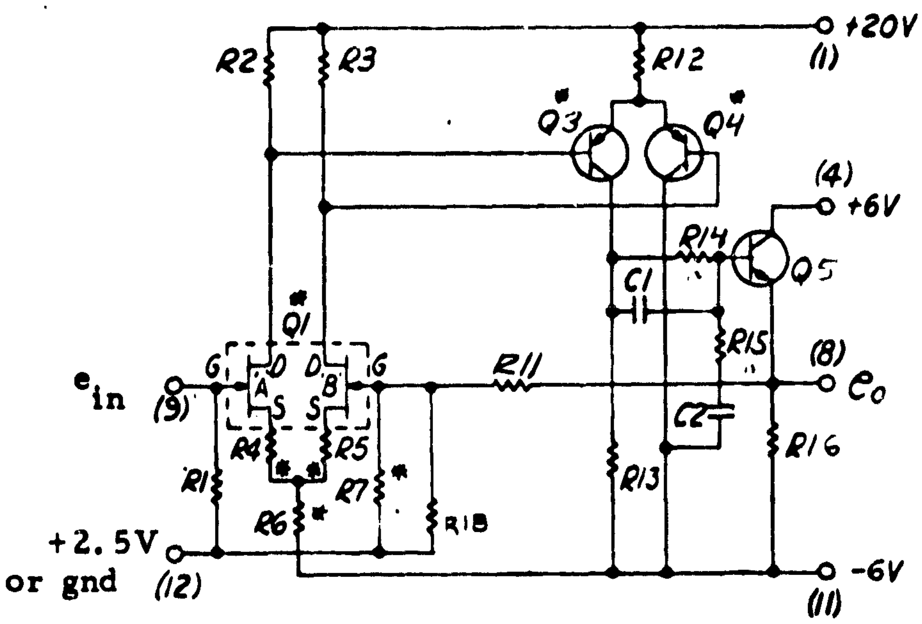

Fixed Gain Amp
(reference W4518)

C1 = 120 pf
C2 = 1000 pf
Q1 = 2N3954
Q2 = FM3300
Q3 = Q4 = ML20001
Q5 = FM2484

R1 = 22 Meg
R2 = R3 = 47.5K
R4, R5, R6, R7, R9, R13, R16 = Select
R8 = R11 = 40.2K
R10 = 2.37K
R12 = 25.5K
R14 = 10K
R15 = 1K
R17 = 39K
R18 = 4.64K

Figure 81
Gain Change and Fixed Gain Amplifier Schematic

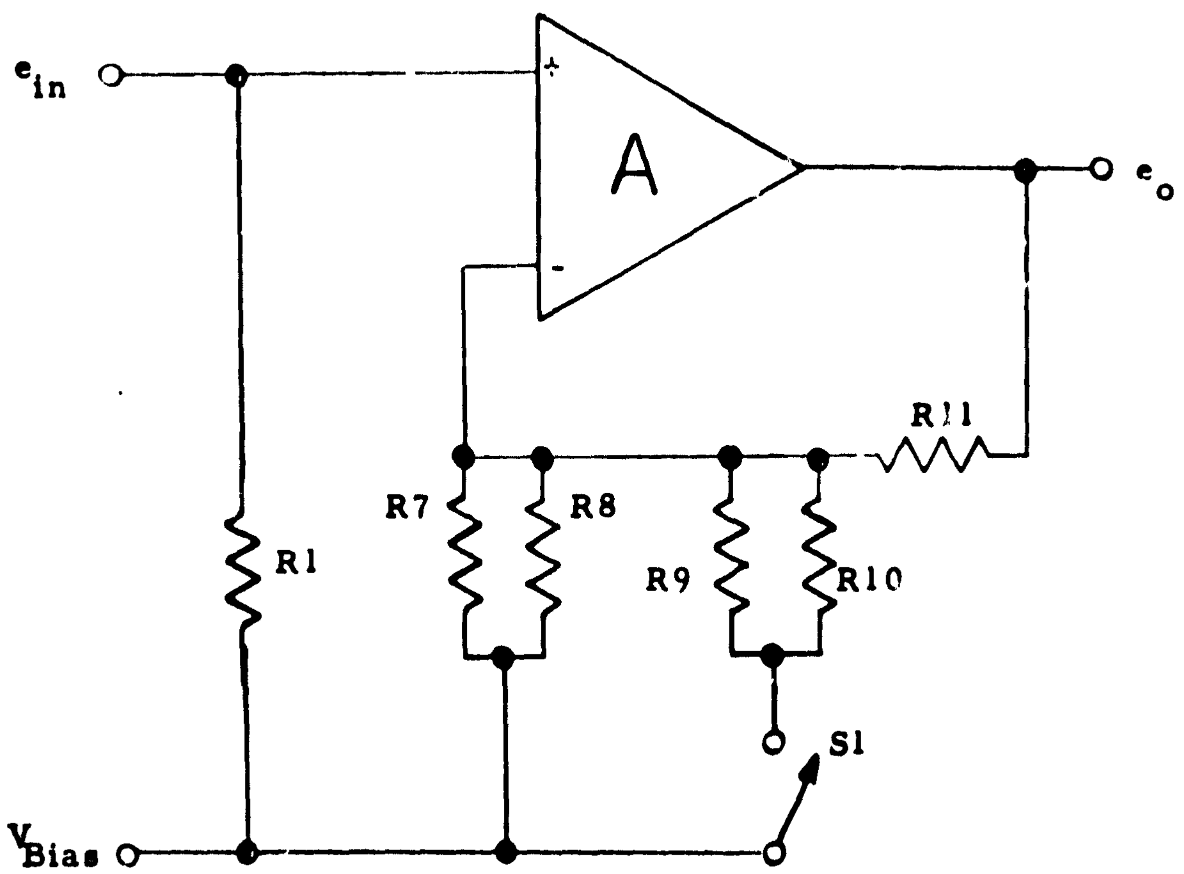

Note: R7 and R9 are Gain Trim Resistors.

Figure 82

Simplified Equivalent Circuit of Gain Change and Fixed Gain Amplifier

154

In the high gain state, S1 is closed which places R9 R10 in parallel with the parallel combination of R7 and R8. Thus the expression for high gain is:

$$G_{High} = 1 + \frac{R11}{(R7 \parallel R8 \parallel R9 \parallel R10)}$$

Let the parallel combination of R7 through R10 = R_T.

$$R_T = \frac{1}{\frac{1}{R_7} + \frac{1}{R_8} + \frac{1}{R_9} + \frac{1}{R_{10}}} \cong 2.11K$$

$$G_{High} = 1 + \frac{R11}{R_T} = 1 + \frac{40.2K}{2.11K} = 1 + 19$$

$$\boxed{G_{High} = 20.0}$$

Note that transistor Q2 in Figure 81 is used as S1 to change the gains.

5.6.2 Fixed Gain Amplifier

The operation of the Fixed Gain Amplifier is the same as the Gain Change Amplifier except the S1 is always open. Note that Q2, R9, R10, and R17 are missing from the Fixed Gain Amplifier Circuit, thus, the gain is fixed.

The expression for the gain reduces to:

$$G_{Fixed} = 1 + \frac{R11}{(R7 \parallel R8)}$$

where R7 = 120K

R8 = 4.64K

R11 = 40.2K

$$G_{Fixed} = 1 + \frac{40.2K}{4.48K} = 1 + 9$$

$$\boxed{G_{Fixed} = 10}$$

5.7 Output Amplifier

Figure 83 depicts the output amplifier configuration as used in the Waveform Channels. The +2.5v supply that biases Q1 also sets the output resting level through resistors R4 and R5, to +2.5v ± 0.02v. The operation of Q1, Q2, and Q3 is identical to that of the gain change amplifier. The output stage, Q4 Q5, utilizes a complementary push-pull circuit to minimize the quiescent bias current yet provides relatively high power output. Diodes CR1 and CR2 establish the bias point for Q4 and Q5. Diodes CR4 and CR5 limit the output voltage swing to +6.5 and -0.5v. CR3 protects the base-emitter junction of Q4 against large signal excursions. Capacitor C1 limits the high frequency response for amplifier stability. The function of capacitor C2 is to decrease the output impedance of the amplifier at high frequencies in order to increase the response to load transient. The spacecraft telemetry commutator appears as a transient load with some capacity. To minimize telemetry error, this external capacity must be charged or discharged to the same voltage as that of the amplifier within a specified period of time. C2 increases the transient load response of the amplifier to satisfy this requirement.

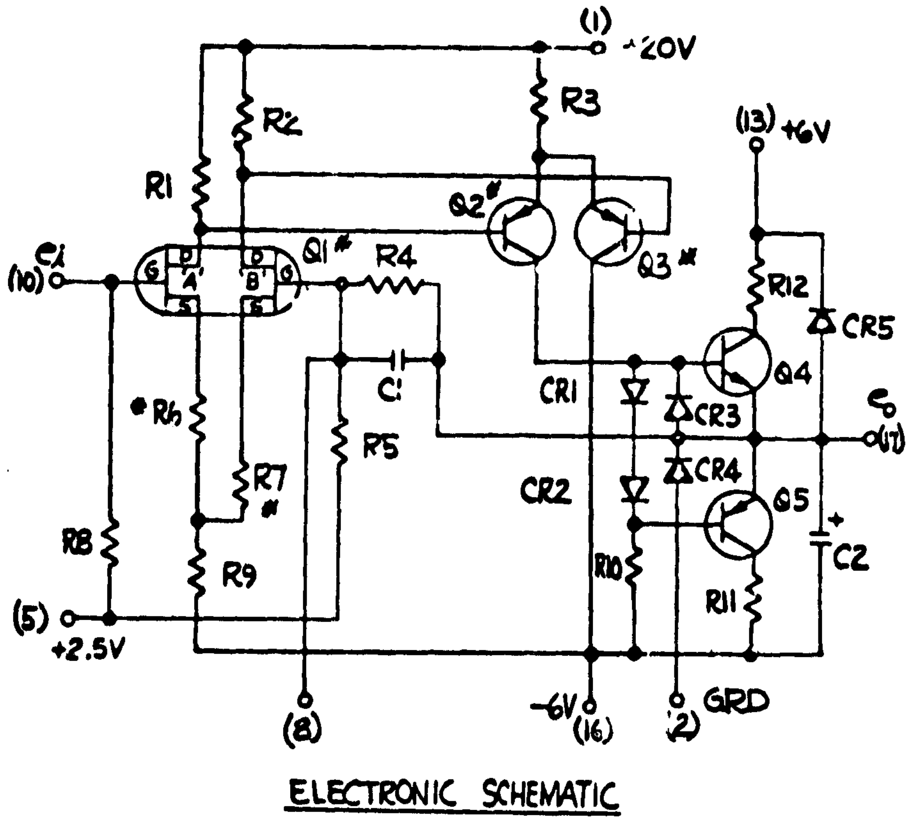

(Reference W4317)

C1 = 220 pf

C2 = .39 μf

R1 = R2 = 47.8K

R3 = 22.1K

R4 = 39.2K

R5 = 10K

R6, R7 = select

R8 = 22 meg

R9 = 49.9K

R10 = 82K

R11 = 3.6K

R12 = 1.8K

Q1 = 2N3954

Q2 = Q3 = Q5 = ML 20001

Q4 = FM 2484

Figure 83
Output Amplifier Schematic

RO 68-164

5.8 1850 Hz Low Pass Filter

Figure 84 illustrates the detailed schematic diagram of the 1850 Hz Low Pass Filter. Figure 85 is a simplified equivalent circuit. In Figure 85 the input e_{in} passes through the RC filter network into a unity gain amplifier (A) which is used as a follower. The output of the amplifier is fed back into the filter network via C1. The transfer function is described as follows:

Assume the input impedance of A is infinite, the output impedance = 0.

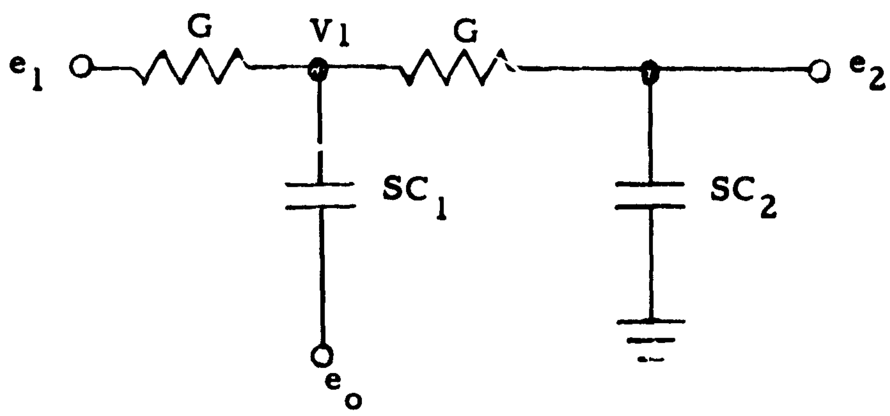

$$V_1 (2G + SC_1) + e_2 (-G) = e_1 G + e_o SC_1$$

$$V_1 (-G \quad) + e_2 (G + SC_2) = 0$$

$$e_2 = \frac{(2G + SC_1)(0) - (-G)(e_1 G + e_o SC_1)}{(2G + SC_1)(G + SC_2) - (-G)(-G)}$$

But $e_2 = e_o$, thus

$$e_o = \frac{e_1 G^2 + e_o SC_1 G}{G^2 + 2SC_2G + SC_1G + S^2C_1C_2}$$

158

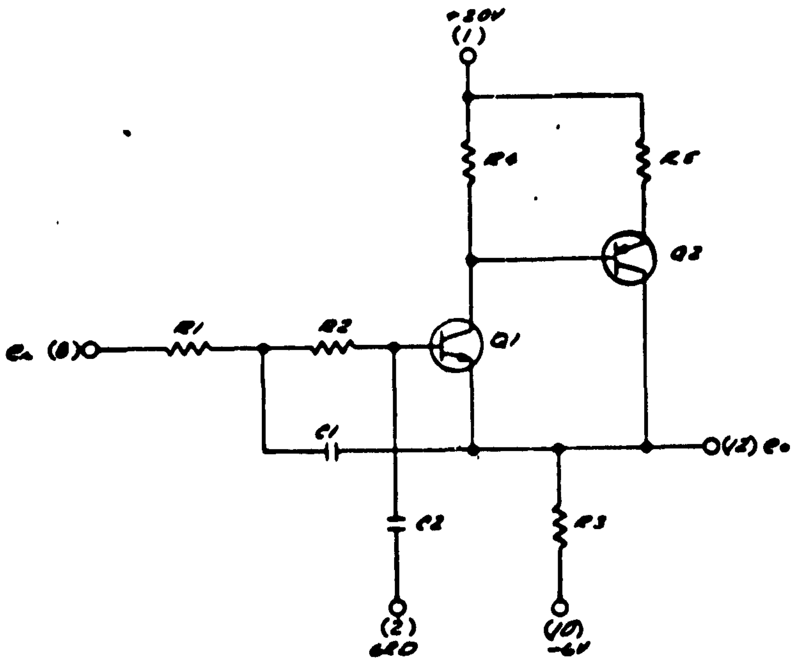

C1 = 3000 pf
C2 = 750 pf
R1 = R2 = 57.6K
R3 = R5 = 30K
R4 = 1.5 meg
Q1 = FM 2484
Q2 = ML 20001

Figure 84
1850 Hz Low Pass Filter Schematic

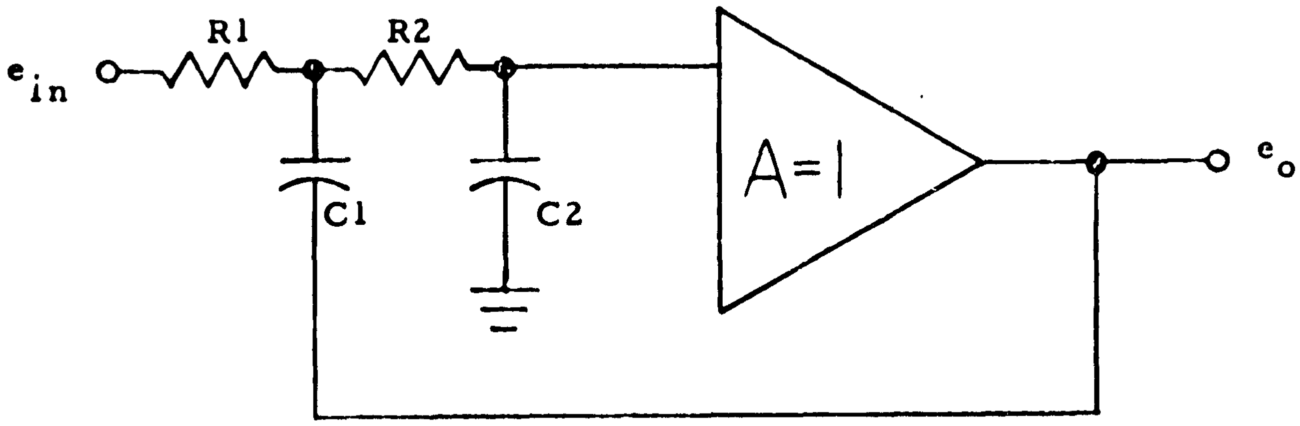

$C1 = 3000$ pf

$C2 = 750$ pf

$R_1 = R_2 = 57.6K$

Figure 85
Equivalent Circuit of 1850 Hz Low Pass Filter

$$\frac{e_o}{e_1} = \frac{1}{1 + 2SC_2R + S^2 C_1 C_2 R^2}$$

$$G = \frac{1}{1 + (2C_2R) S + (C_1 C_2 R^2) S^2}$$

We want this in the form

$$1 + K_1 T_1 S + T_1^2 S^2$$

$$1 + 2\zeta T_1 S + T_1^2 S^2$$

thus $2\zeta T_1 = 2C_2R$

$$T_1^2 = C_1 C_2 R^2$$

$$T_1 = \sqrt{C_1 C_2 R^2}$$

$$\boxed{T_1 = \left(\sqrt{C_1 C_2}\right) R}$$

$$2\zeta T_1 = K_1 T_1 = 2C_2R$$

$$K_1 = \frac{2C_2R}{T_1} = \frac{2C_2 R}{\sqrt{C_1 C_2} R} = \frac{2C_2}{\sqrt{C_1 C_2}}$$

$$\boxed{K_1 = \frac{2C_2}{\sqrt{C_1 C_2}}}$$

$$\boxed{G = \frac{1}{1 + K_1 T_1 S + T_1^2 S^2}}$$

$C_1 = 3000$ pf R = 57.6K

$C_2 = 750$ pf

$\sqrt{C_1 C_2} = \sqrt{(3,000)(750)} = 1500$ pf

$T_1 = (1,500 \text{ pf})(57.6\text{K}) = (1.5)(10^{-9})(57.6)(10^3)$

$$\boxed{T_1 = 86.4 \times 10^{-6}}$$

$$f_1 = \frac{.1591}{86.4 \times 10^6} = \frac{159.1 \times 10^3}{86.4} = 1,850 \text{ KHz}$$

$$K_1 = \frac{2\,(750)}{1500} = \frac{1500}{1500} = 1.0$$

$$\boxed{K_1 = 1.0}$$

$$2\zeta = K_1,\ \zeta = \frac{K_1}{2} = \frac{1}{2} = 0.5$$

from Feedback Control System Analysis and Synthesis, page 294, the overshoot is 1.25 db.

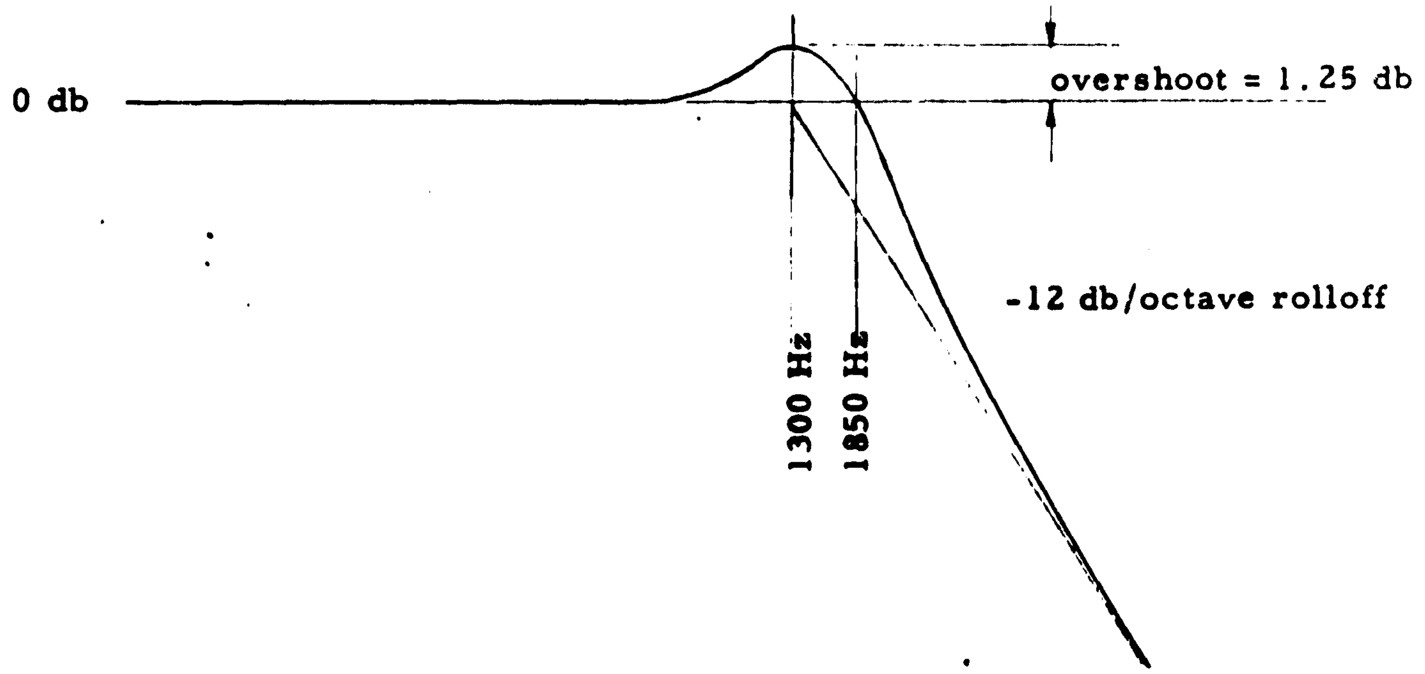

162

$$\boxed{\text{gain of the circuit} = \frac{1}{1 + T_1 S + T_1^2 S^2}} \qquad (1)$$

Where $T_1 = 86.3 \times 10^{-6}$ seconds.

Equation 1 is the transfer equation shown in Figure 9A, page 16, to describe the characteristics of this filter. The tabulation listed below is a computer print out of the Theoretical Frequency Response based on Equation 1. The result is also plotted out on page 147, Figure 86.

OGO F 22 SEARCH COIL
1850 HZ LOW PASS FILTER
THEORETICAL FREQUENCY RESPONSE

ROBERT J NAHABIT
MARSHALL LABS

FREQUENCY	E OUT/E IN	DB GAIN
1	1.	0
2	1.	0
5	1.	0
10	1.00001	0
20	1.00006	0
50	1.00037	0
100	1.00147	.01
200	1.00586	.05
400	1.0232	.2
500	1.0359	.31
720	1.06802	.57
800	1.08642	.72
1000	1.12336	1.01
1100	1.13901	1.13
1200	1.15021	1.21
1300	1.15469	1.25
1500	1.13512	1.1
1800	1.02335	.2
1853	.996343	-.03
2000	.910182	-.82
2461	.646801	-3.78
3000	.432087	-7.28
4000	.232957	-12.64
5000	.144821	-16.76
7500	6.22531 E-2	-24.08

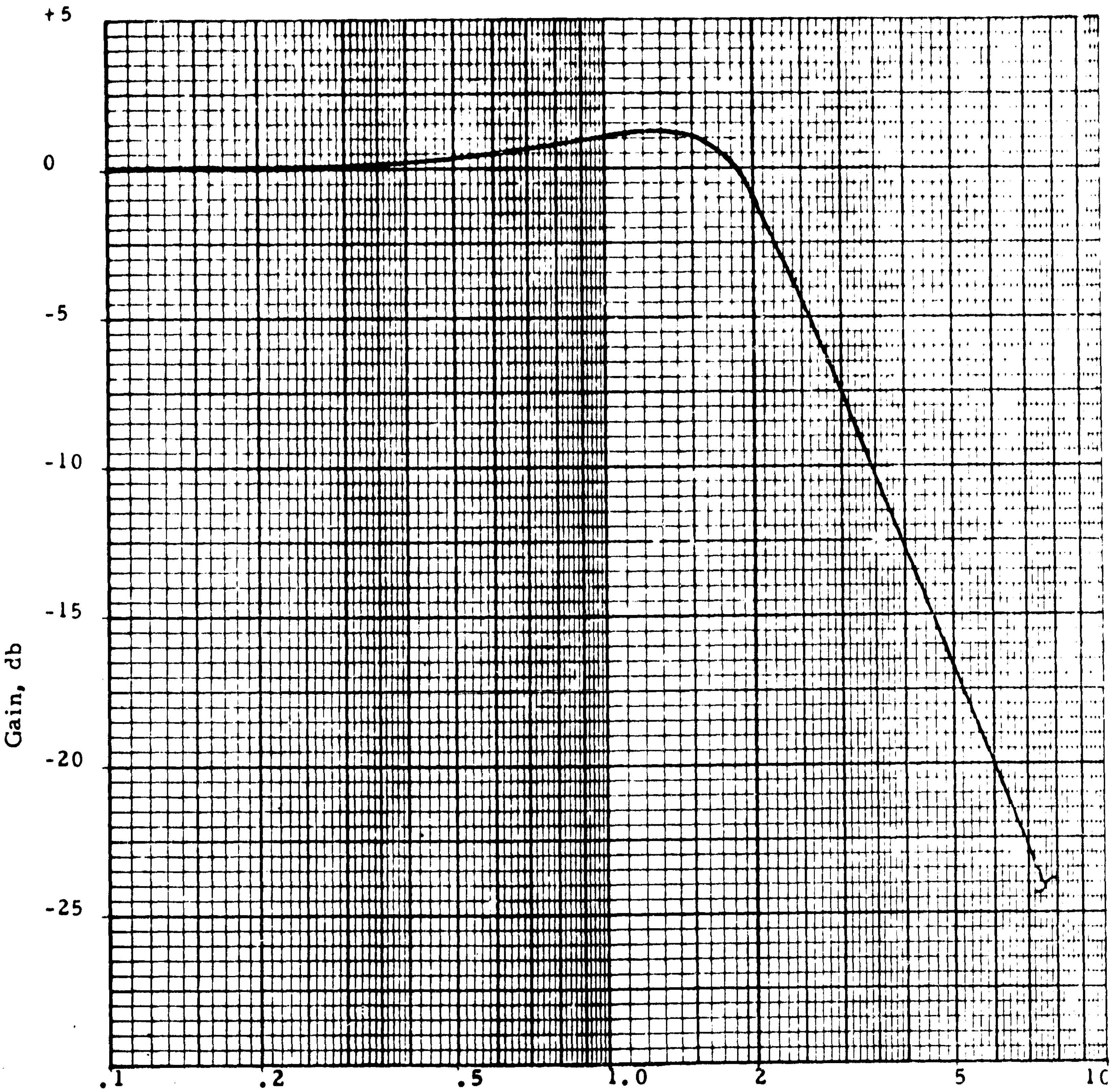

Figure 86

1850 Hz Low Pass Filter Theoretical
Frequency Response

5.9 Bandpass Amplifier

The Spectrum Analyzer consists of seven bandpass amplifiers per axis. The bandpass amplifiers differ only in the value of the capacitors C1, C2, C4 and C5 used to set the center frequencies. A detailed schematic diagram of the bandpass amplifier is shown in Figure 87. Figure 88 is a simplified equivalent circuit diagram.

The bandpass amplifier consists of a D-C coupled negative feedback amplifier with a bridge T filter in the feedback loop. The input coupling network, consisting of C1, R1, C2 and the amplifier input impedance is parallel with R3, provide a low Q bandpass filter. At the resonant frequency of the feedback network, negative feedback is a minimum, that is, the amplifier gain at at maximum and the desired bandpass frequency is achieved.

For Filter No. 1:

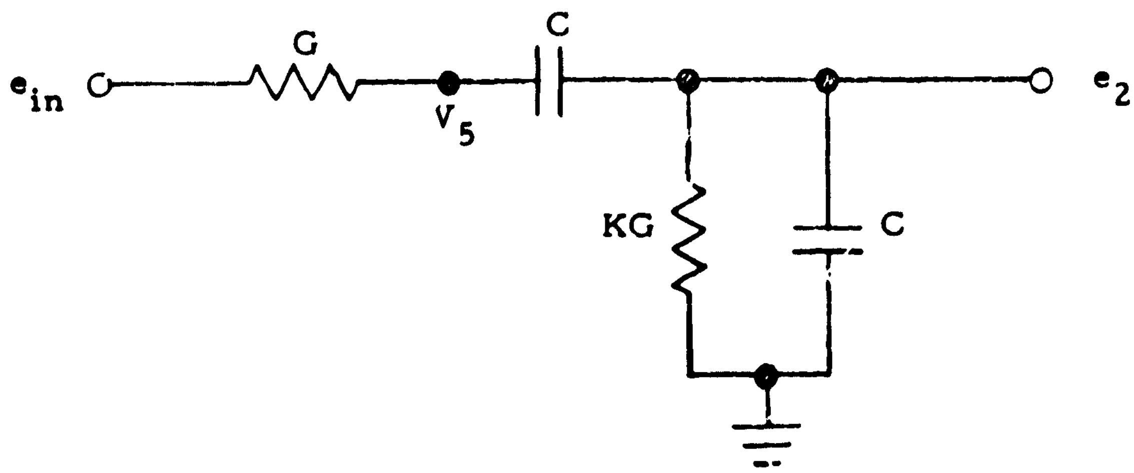

where

$$K = \frac{R1}{R2} = \frac{261K}{20.5K} = 12.7$$

$$G = \frac{1}{R_1} \quad SC = \frac{1}{Z_C} \quad G' = \frac{1}{R_2}, \quad K = \left(\frac{1}{G}\right)\left(\frac{1}{\frac{1}{G'}}\right) = \frac{G'}{G}, \quad G' = KG$$

$$V_5 (G + SC) + e_2 (-SC) = G\, e_{in}$$

$$V_5 (-SC) + e_2 (KG + 2\,SC) = 0$$

163

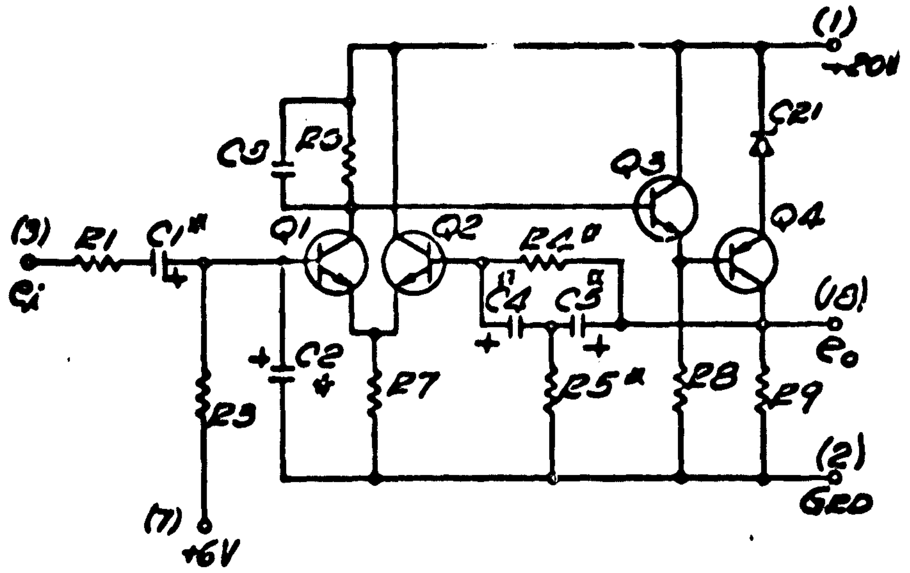

ELECTRONIC SCHEMATIC

C1 = C2 = C4 = C5	=	0.22 µf (10 Hz)
	=	0.1 µf (22 Hz)
	=	0.047 µf (47 Hz)
	=	0.022 µf (100 Hz)
	=	0.01 µf (216 Hz)
	=	0.0039 µf (550 Hz)
	=	0.0022 µf (1000 Hz)

C3 = 1000 pf
R1 = 261 K
R3 = 20.5 K
R4 = 806 K
R5 = 6.65 K
R6 = 200 K
R7 = 100 K
R8 = 430 K
R9 = 47 K
Q1 = Q2 = Q3 = FM 2484
Q4 = ML 20001

Figure 87
Bandpass Amplifier Schematic

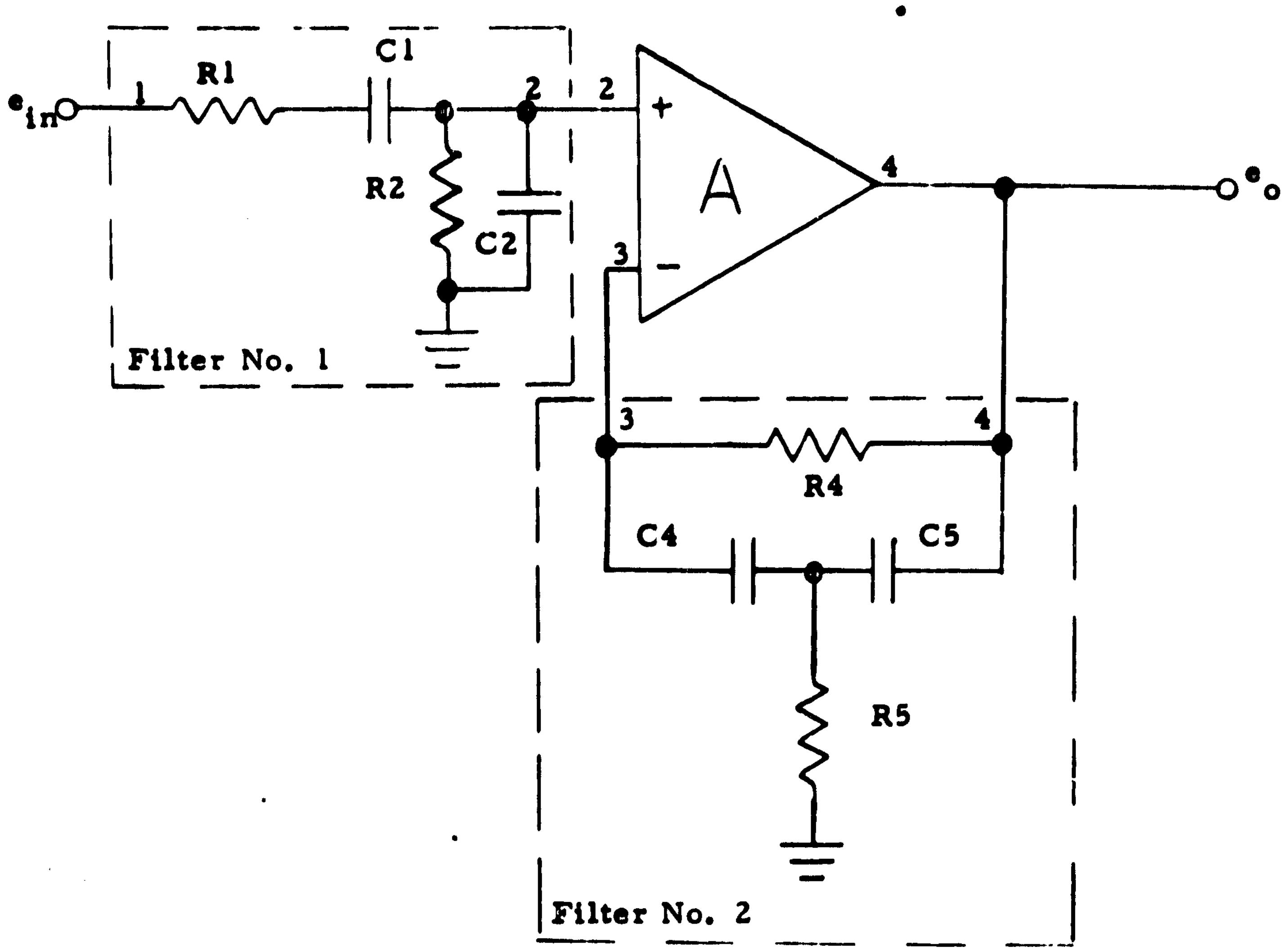

Figure 88
Bandpass Amplifier Equivalent Circuit

$$e_2 = \frac{\begin{vmatrix} (G + SC) & (G\, e_{in}) \\ (-SC) & (0) \end{vmatrix}}{\begin{vmatrix} (G + SC) & (-SC) \\ (-SC) & (KG + 2SC) \end{vmatrix}}$$

$$e_2 = \frac{0 - (-SC)\ (G\, e_{in})}{(G + SC)\ (KG + 2SC) - (-SC)\ (-SC)}$$

$$\frac{e_2}{e_{in}} = \frac{SCG}{KG^2 + 2\,SGC + SKGC + S^2\,C^2}$$

$$\frac{e_2}{e_{in}} = \frac{SCR}{K + 2SCR + SKCR + S^2\,C^2\,R^2}$$

$$\frac{e_2}{e_{in}} = \frac{\frac{1}{\sqrt{K}}\ \left(\frac{RC}{\sqrt{K}}\right)\ S}{1 + \left(\frac{2 + K}{\sqrt{K}}\right)\ \left(\frac{RC}{\sqrt{K}}\right)\ S + \left(\frac{CR}{\sqrt{K}}\right)^2\ S^2}$$

let $T_o = \frac{RC}{K}$

$$\frac{e_2}{e_{in}} = \frac{\left(\frac{1}{\sqrt{K}}\right)\ (T_o)\ S}{1 + \left(\frac{2 + K}{\sqrt{K}}\right)\ T_o\, S + T_o^2\, S^2} \qquad \text{------------------------------(1)}$$

$$K = \frac{261\ K}{20.5\ K} = 12.7 \qquad\qquad \frac{2 + K}{\sqrt{K}} = \frac{2 + 12.7}{3.57} = \frac{14.7}{3.57}$$

$$= 4.15$$

$$\sqrt{K} = \sqrt{12.7} = 3.57$$

$$\frac{1}{\sqrt{K}} = 0.28$$

$$\boxed{\text{Gain of 1st Filter} \quad = \quad \frac{0.28\, T_o S}{1 + 4.15\, T_o S + T_o^2 S^2}} \quad \text{-----(2)}$$

for 100 Hz:

$$T_o = \frac{RC}{\sqrt{K}} = \frac{(261K)\,(0.022\mu)}{3.57}$$

$$T_o = 1.61 \text{ milliseconds}$$

$$f_o = \frac{1}{2\pi\, T_o} = \frac{.16}{1.61K} = \frac{160}{1.61} = 100 \text{ Hz}$$

From equation 1 the denominator is:

$$1 + 4.15\, T_o S + T_o^2 S^2$$

factoring reveals roots of 3.82 and 0.365

Thus equation 1 becomes

$$\frac{e_2}{e_{in}} = \frac{0.28\, T_o S}{(1 + 3.82\, T_o S)\,(1 + 0.365\, T_o S)}$$

1st $\quad f_o = \dfrac{1}{2\pi\, T_o}$

$$f_a = \frac{1}{2\pi\, T_o\,(0.365)} = \frac{f_o}{.365} = 2.74\, f_o$$

$$= 274 \text{ Hz}$$

$$f_b = \frac{1}{2\pi\, T_o\,(3.82)} = \frac{fo}{3.82} = 0.262\, fo$$

$$= 26.2 \text{ Hz}$$

169

Which plots thus:

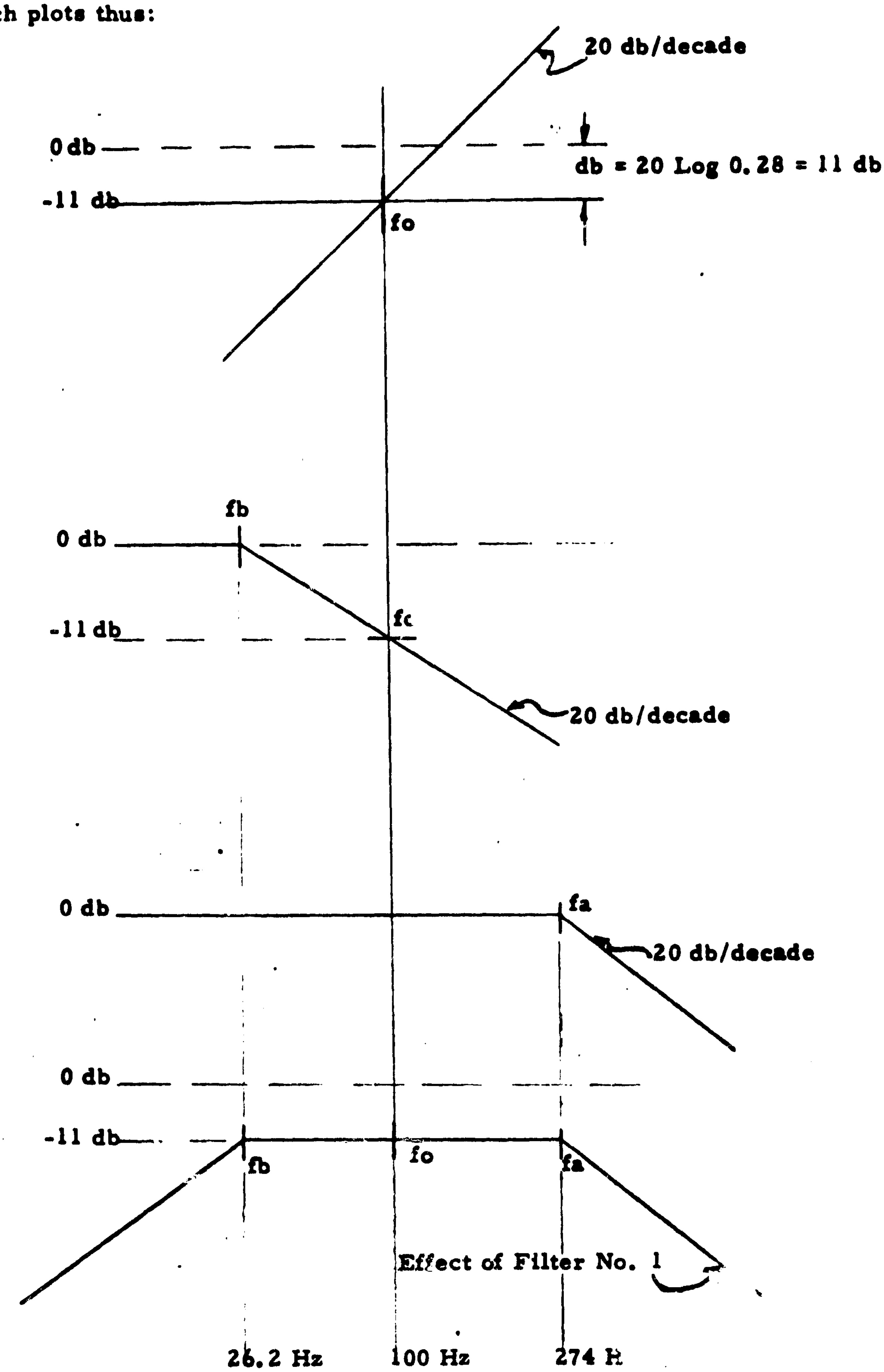

Effect of Filter No. 1

170

For Filter No. 2 and A:

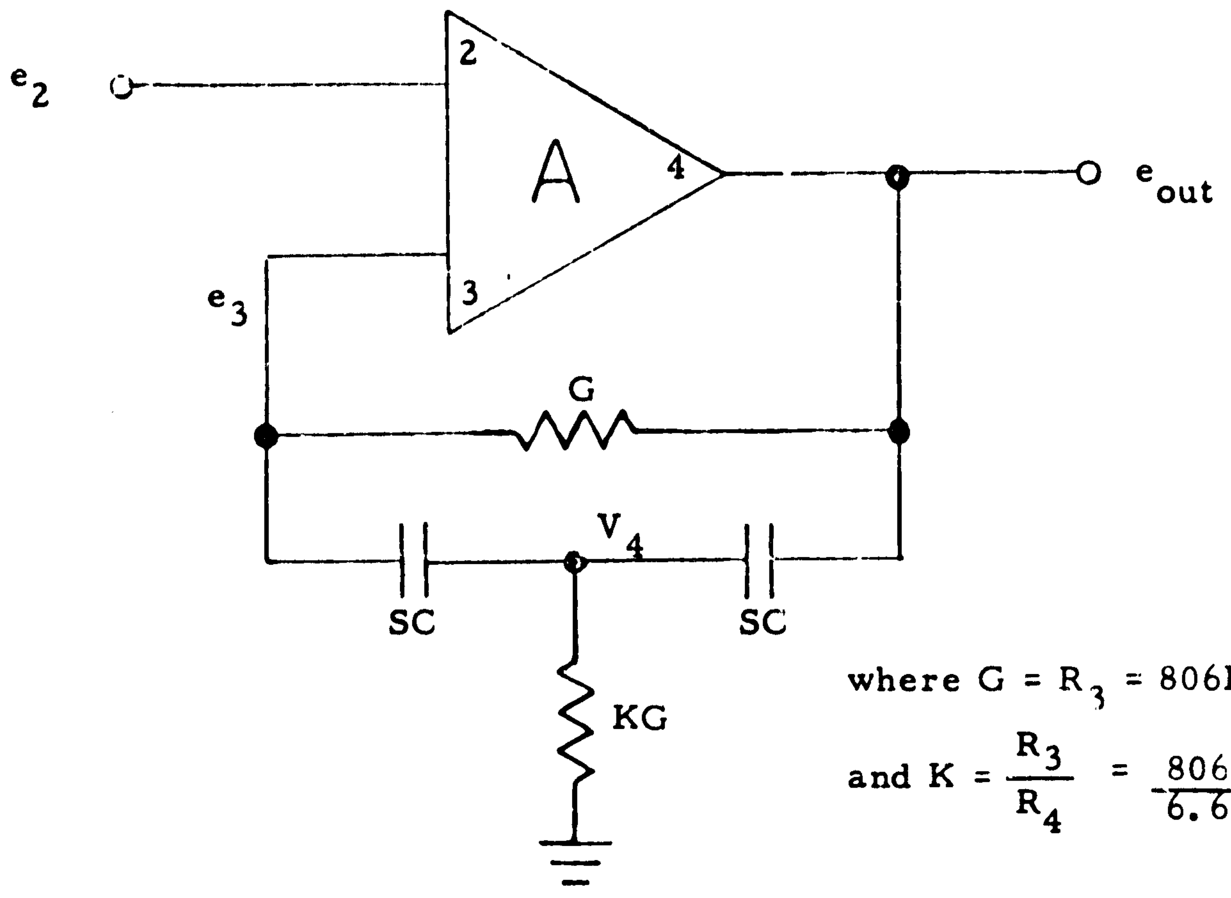

where $G = R_3 = 806K$

and $K = \frac{R_3}{R_4} = \frac{806}{6.65} = 121$

Assume $A \longrightarrow$ infinity

then $e_3 \longrightarrow e_2$

gain $= \frac{e_{out}}{e_2} = \frac{e_{out}}{e_3}$

$V_4 \quad (KG + 2SC) + e_3 (-SC) = e_o \ SC$

$V_4 \quad (-SC) + e_3 (G + SC) = e_o \ G$

Note that e_o is the independent variable since it has a very low source impedance (i.e. the output Z of the amplifier) while e_3 has a very high load Z.

AD 68-164

$$e_3 = \frac{\begin{vmatrix} (KG + 2SC) & (e_o SC) \\ (-SC) & (e_o G) \end{vmatrix}}{\begin{vmatrix} (KG + 2SC) & (-SC) \\ (-SC) & (G + SC) \end{vmatrix}}$$

$$\frac{e_3}{e_o} = \frac{(KG + 2SC)\ (G) - (-SC)\ (SC)}{(KG + 2SC)\ (G + SC) - (-SC)\ (-SC)}$$

$$\frac{e_3}{e_o} = \frac{1 + \frac{2}{\sqrt{K}} \left[\frac{RC}{\sqrt{K}}\right] S + \left[\frac{RC}{\sqrt{K}}\right]^2 S^2}{1 + \frac{2+K}{\sqrt{K}} \left[\frac{RC}{\sqrt{K}}\right] S + \left[\frac{RC}{\sqrt{K}}\right]^2 S^2}$$

let $T_o = \frac{RC}{\sqrt{K}}$

$$\frac{e_3}{e_0} = \frac{1 + \frac{2}{\sqrt{K}}\ T_o S + T_o^2\ S^2}{1 + \frac{2+K}{\sqrt{K}}\ T_o S + T_o^2\ S^2}$$

$K = 121$

$\sqrt{K} = \sqrt{121} = 11$

for 100 Hz filter

$$T_o = \frac{RC}{\sqrt{K}} = \frac{(806K)\ (.022\ \mu)}{11} = 1.61 \text{ msec}$$

$$f_o = \frac{1}{2\pi\ T_o} = \frac{0.16}{1.61 \text{ ms}} = \frac{160}{1.61} = 100 \text{ Hz}$$

117

$$\frac{2}{\sqrt{K}} = \frac{2}{11} = 0.182$$

$$\frac{2 + K}{\sqrt{K}} = \frac{2 + 121}{11} = \frac{123}{11} = 11.2$$

$$\frac{e_3}{e_o} = \frac{1 + (0.182)\ T_o S + T_o^2 S^2}{1 + (11.2)\ T_o S + T_o^2 S^2}$$

but gain $= \dfrac{e_o}{e_3}$

$$\frac{e_o}{e_3} = \boxed{\text{Gain of filter No. 2} = \frac{1 + 11.2\ T_o S + T_o^2 S^2}{1 + 0.182\ T_o S + T_o^2 S^2}} \quad \text{------ (2)}$$

factoring the numerator $1 + 11.2\ X + 1\ X^2$ yields roots of 11 and 0.1.

thus:

$$\boxed{\text{Gain} = \frac{(1 + 11\ ToS)\ (1 + 0.1\ ToS)}{1 + (0.182)\ ToS + To^2\ S^2}}$$

$$f_o = \frac{1}{2\ \pi\ To}$$

$$f_c = \frac{1}{(2\ \pi\ To)\ 11} = \frac{fo}{11} = .091\ fo \cong 9.1\ Hz$$

$$f_d = \frac{1}{(2\ \pi To)\ 0.1} = \frac{fo}{0.1} = 10\ fo = 1\ K\ Hz$$

Thus:

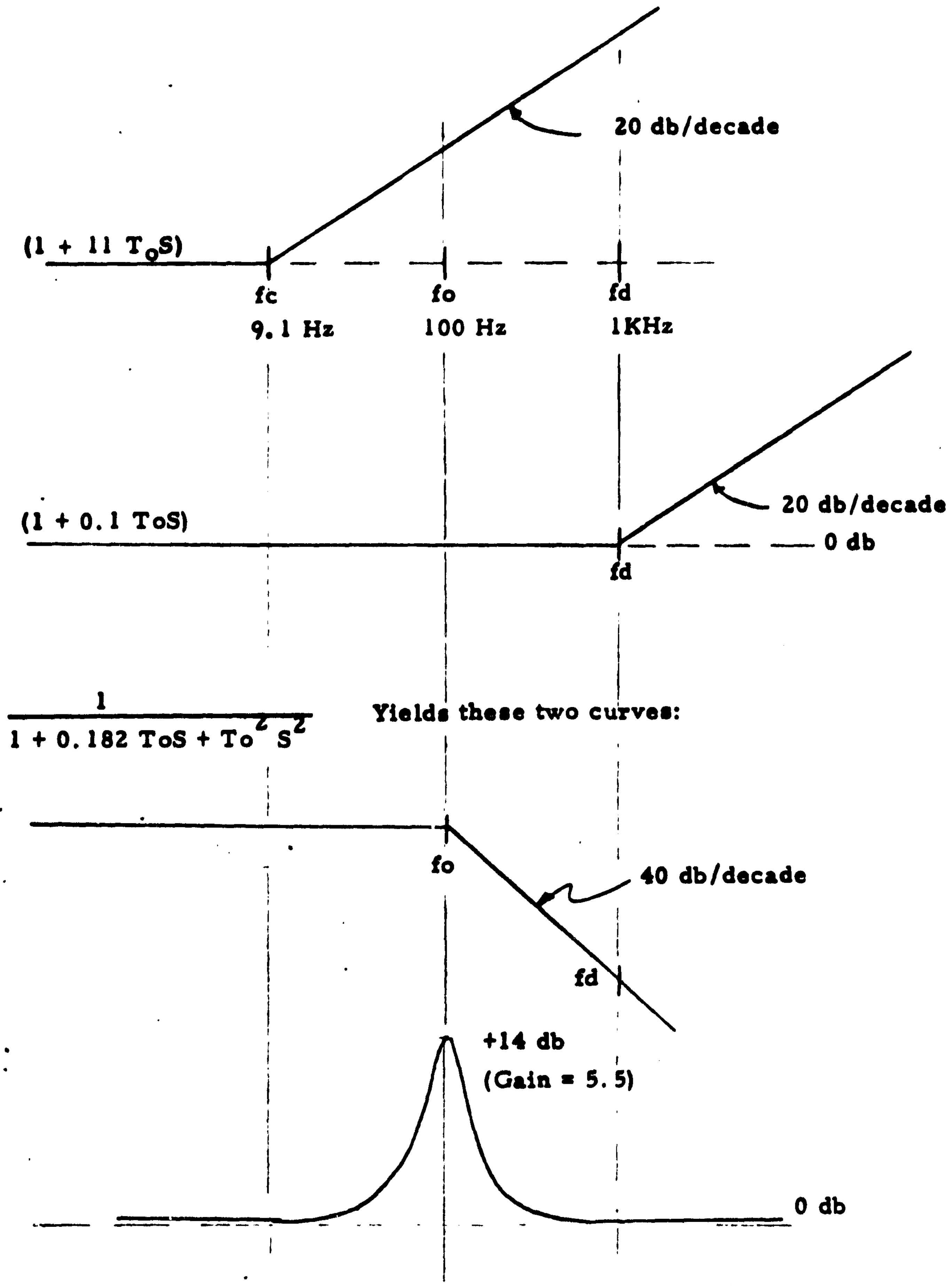
20 db/decade
(1 + 11 T_oS)
fc
9.1 Hz
fo
100 Hz
fd
1KHz
20 db/decade
(1 + 0.1 ToS)
0 db
fd
$\frac{1}{1 + 0.182\ ToS + To^2 S^2}$
Yields these two curves:
fo
40 db/decade
fd
+14 db
(Gain = 5.5)
0 db

$2\zeta = 0.182$ $\zeta = 0.091$, from "Feedback Control Systems Analysis and Synthesis", page 294 $\zeta = 0.10$, db = +14. Thus the total effect of Filter No. 2 is:

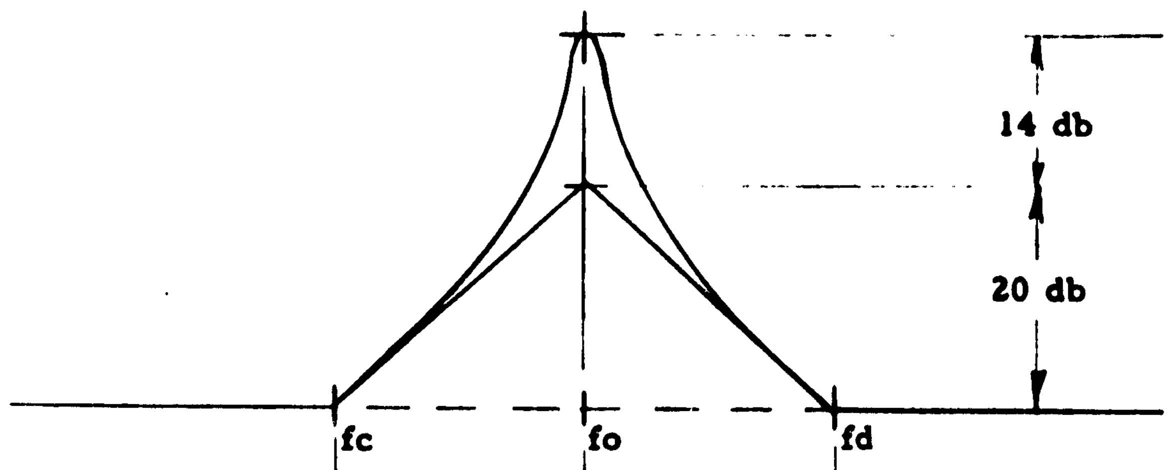

Which yields an overall effect of the circuit thus:

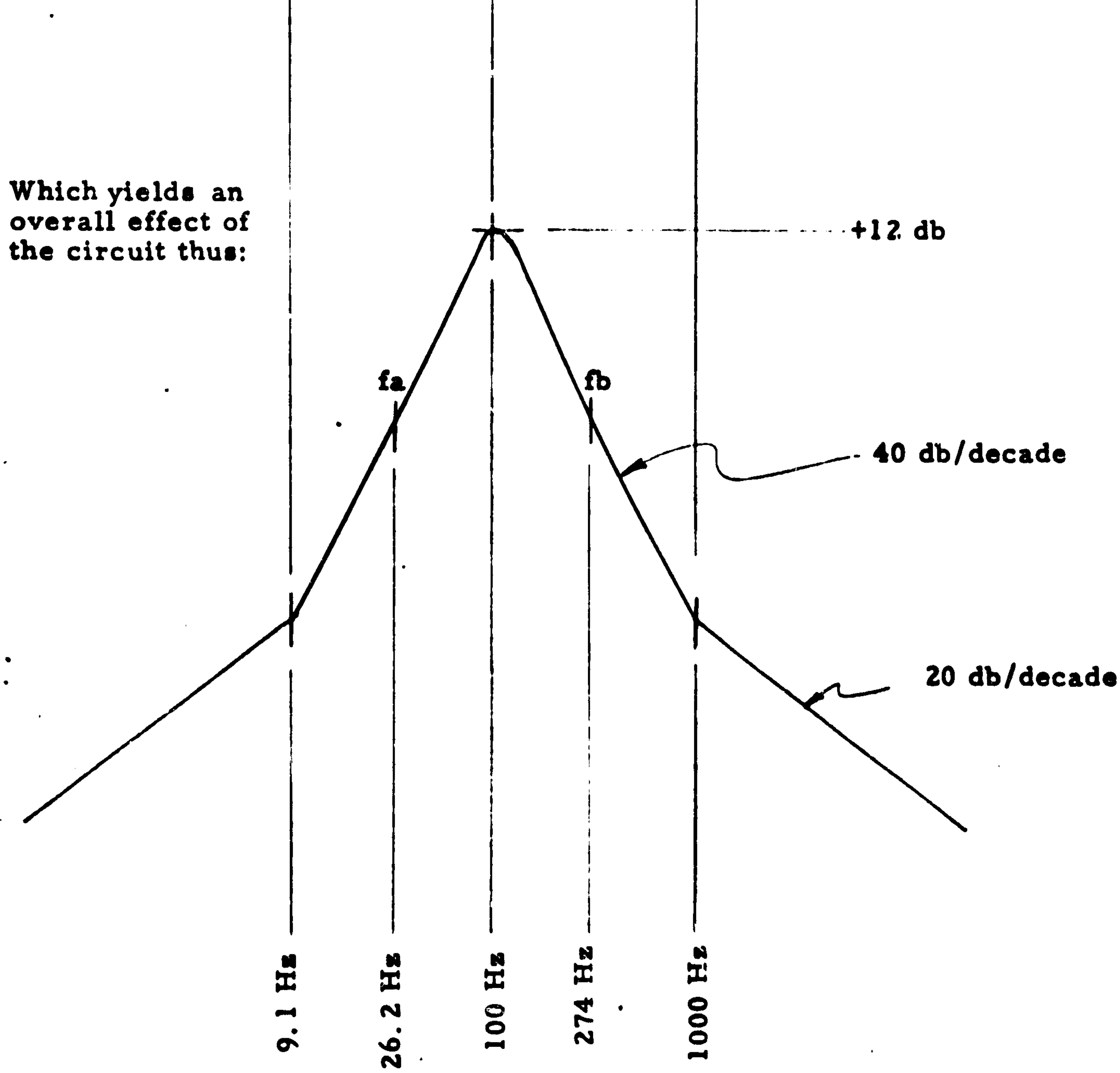

175

The overall gain at fo equals the gain of Filter No. 1 plus the gain of Filter No. 2.

Gain = (-11 db - 11 db) + (+14 db + 20 db) = +12 db

12 db = 3.9811 or 4.0.

Thus the overall gain of the bandpass Filter at fo = 4.0.

5.10 Peak Detector and Detector Dump

Figures 89 and 90 are detailed schematics of the peak detector and the dump circuit. Figure 91 is a simplified schematic. In Figure 91 an input signal (e_{in}) is AC coupled to R3 and the input 1 of Amplifier A. CR1 serves to limit the peak value of this signal to ±3.2 volts p-p. (+ 2.6V + V diode). Amplifier A causes point 2 to "follow" positive value only (because of CR2) of signal at point 1. C2 and R7 form a large time constant network that serve to hold the peak positive output value of the amplifier. $T_{(R7,\ C2)} = 10$ seconds. CR3 and S1 form a dump circuit. S1 is momentarily closed thus discharging C2. S1 is closed once every seven time periods giving C2 six time periods to acquire data. Response time constant is less than 3 milliseconds.

The D.C. characteristics of the peak detector is as shown.

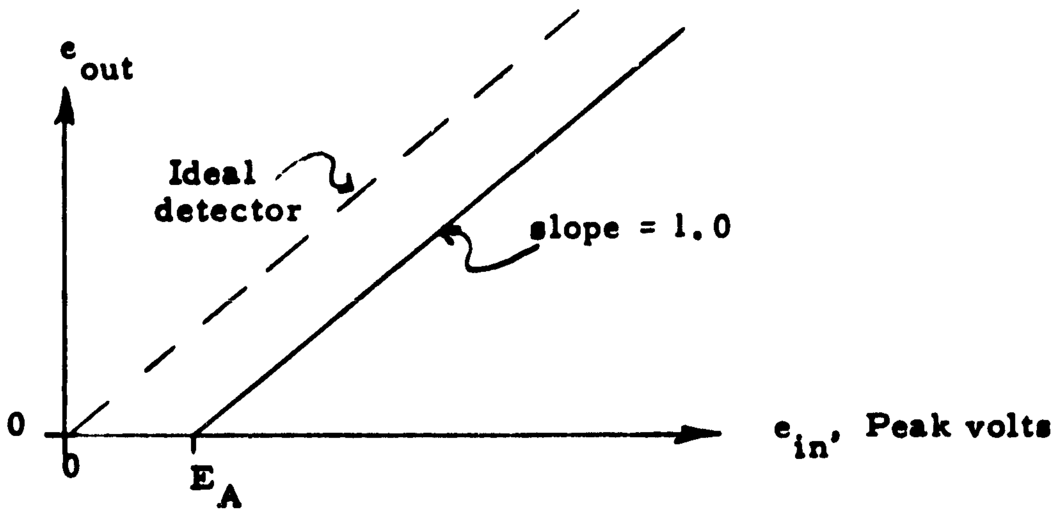

The value of the offset voltages E_A is given by:

$$E_A = \frac{V_{on\ (CR2)}}{A_{OL}}$$

Where A_{OL} = open loop voltage gain of amplifier A.

The slope thereafter is $1 - \frac{1}{A}$ (i.e. the closed, gain of a follower amplifier with open loop gain A). The open loop gain A can be considered larger than 1,000

thus E_A is less then $\frac{600\ mv}{1000} = 0.6$ mv

and the linearity of the output to input signal is better then 0.1%.

The dump circuit drives three peak detectors simultaneously thus the presence of CR4 and CR5 in Figure 91.

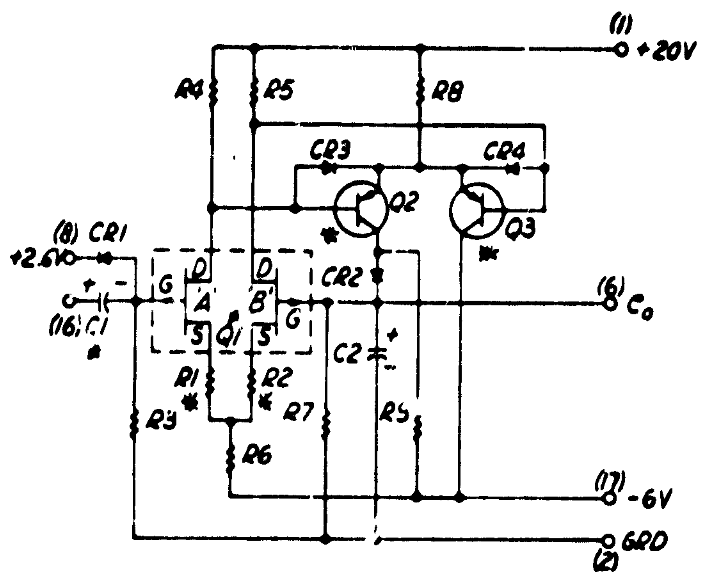

(Reference W4298)

C1 = select (1.0 μf, 3.3 μf)
C2 = .47 μf
Q1 = 2N395*
Q2 = Q3 = ML 20001

R1, R2 = select
R3 = 56K
R4 = R5 = 73.2K
R6 = 76.8K
R7 = 22 meg
R8 = 15K
R9 = 62K

Figure 89
Peak Detector Schematic Diagram

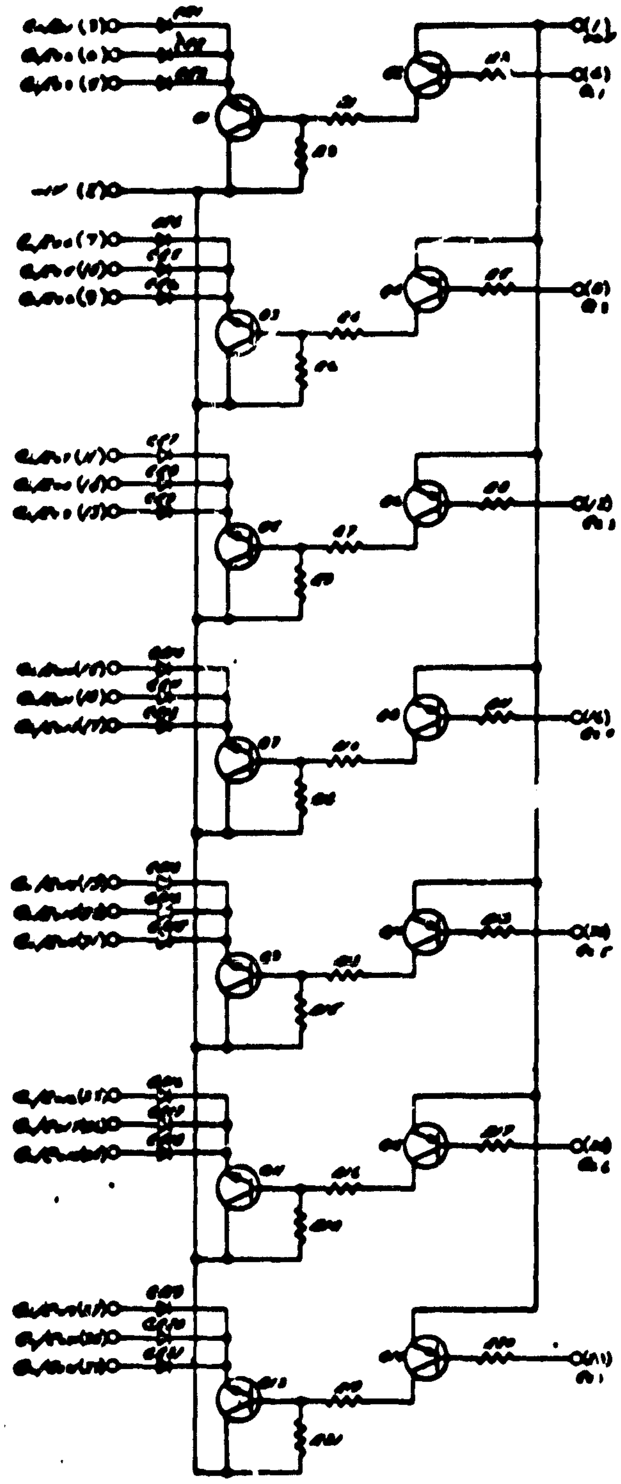

(Reference W4519)

R1 = R4 = R7 = R10 = R13 = R16 = R19 = 5.6K

R2 = R3 = R5 = R6 = R8 = R9 = R11 = R12 = R1[illegible] = [illegible]5 = R17 = R18 = R20 = R21 = 51K

Q1 = Q3 = Q5 = Q7 = Q9 = Q11 = Q13 = [illegible]M 3[illegible]00

Q2 = Q4 = Q6 = Q8 = Q10 = Q12 = Q14 [illegible]2945

Figure 90

Detector Dump Schematic Diagram

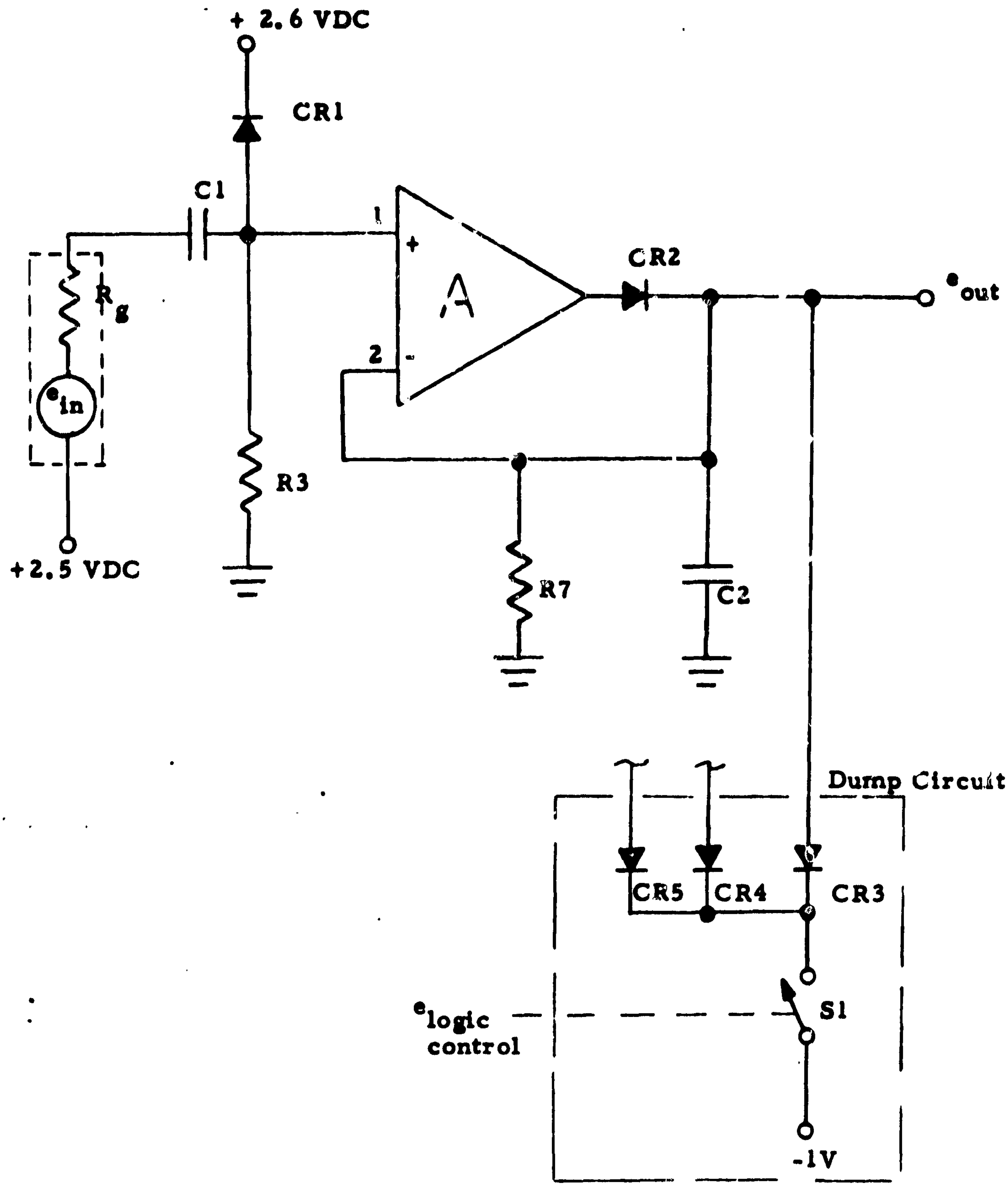

Figure 91
Simplified Detector and Dump Circuit

180

5.11 Spectrum Commutator

The Spectrum Commutator, Figures 92 and 93, consists of seven (7) voltage controlled switching amplifiers driving a common output amplifier. Each switch is turned on in sequence, and the gating arrangement is such that only one (1) switch may be "on" at any one time. The data input to the switching amplifiers is provided by the peak detectors. To insure no loading of this output, high impedance FET's are employed for the input stage. Control of the switching amplifier Q1 is provided by diode CR1. If the control voltage is 6v or greater the transistor is biased off. Clamping CR1 to ground via the commutator gating circuit allows Q1 to function as a linear amplifier. The output amplifier, including the "on" operation of Q1, functions the same as the output amplifier used in the Waveform and Wideband Channels. The major difference is that seven (7) input stages are tied in parallel and sequentially turned "on" and "off" by a gating circuit.

The input switches, Q1 to Q7, are matched pair N channel FET's. Their output offset is further reduced to zero with select source resistors. All drains are connected in parallel to the second stage PNP differential amplifier Q8 and Q9. Low output impedance is achieved by the complementary NPN-PNP emitter follower. The commutator gain of 2 is derived from feedback resistors R29 and R30.

$$A_G = \frac{R29 + R30}{R29} = \frac{100K + 100K}{100K} = 2$$

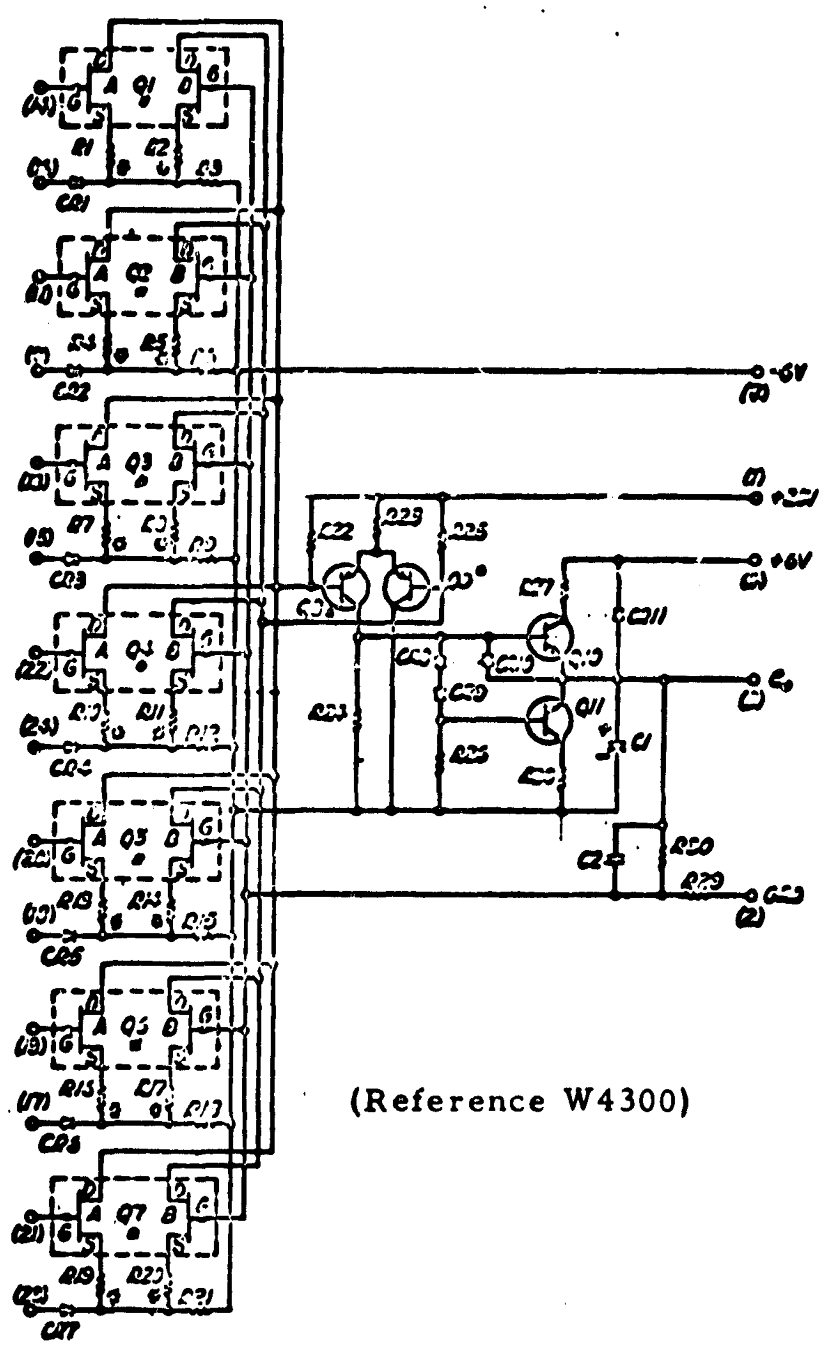

(Reference W4300)

R1 = R4 = R7 = R10 = R13 = R16 = R19 = 150 Ω

R2 = R5 = R8 = R11, R14, R17, R20 = Select

R3 = R6 = R9 = R12 = R15 = R18 = R21 = 76.8K

R22 = R25 = 73.2K

R23 = 10K

R24 = 62K

R26 = 100K

R27 = 1.8K

R28 = 3.6K

R29 - R30 = 100K

C1 = 1.0μf

C2 = 220 pf

Q1 thru Q7 = 2N3954

Q8 = Q9 = ML 20001

Q10 = FM 2484

Figure 92

Spectrum Commutator Schematic Diagram

182

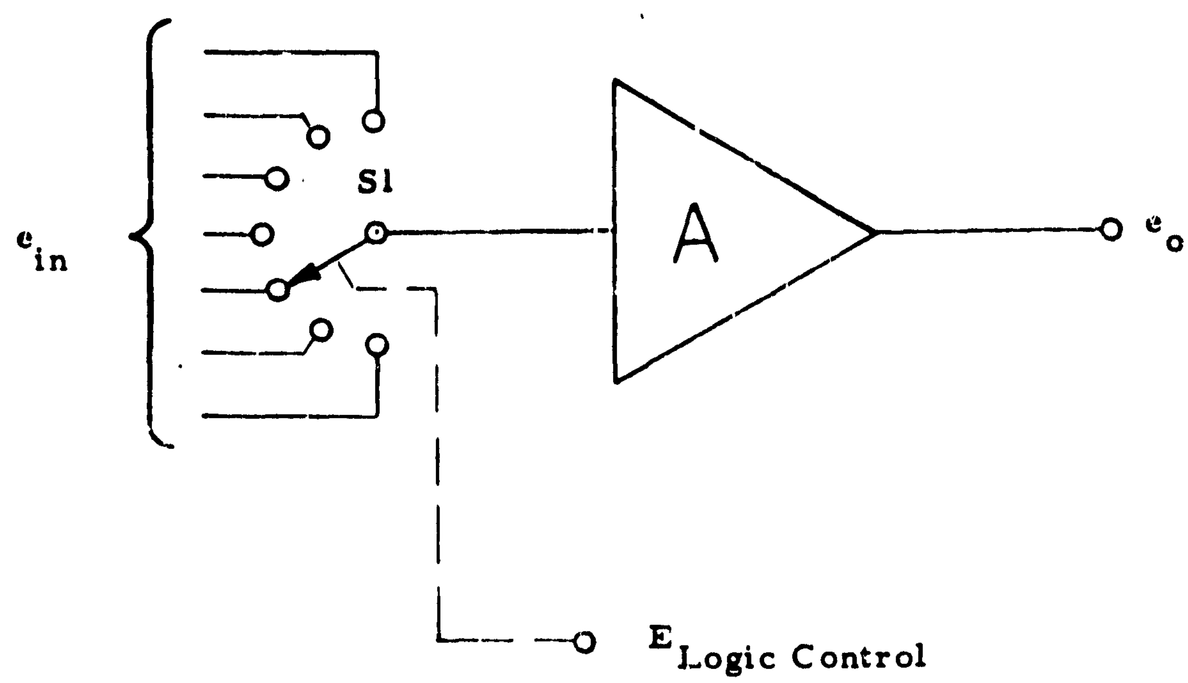

Figure 93
Simplified Spectrum Commutator Circuit

5.12 SCO Low Pass Filter

Figure 94 is a detailed schematic diagram of the SCO Low Pass Filter. Figure 95 is a simplified equivalent circuit, which is useful in the description of the circuit. The input (e_{in}) passes through the RC filter network into a unity gain amplifier (A) which is used as a follower. The output of the amplifier is fedback into the filter network via C1. The transfer function is described as follows:

Assume the input impedance of A = Infinity
the output impedance of A = Zero.

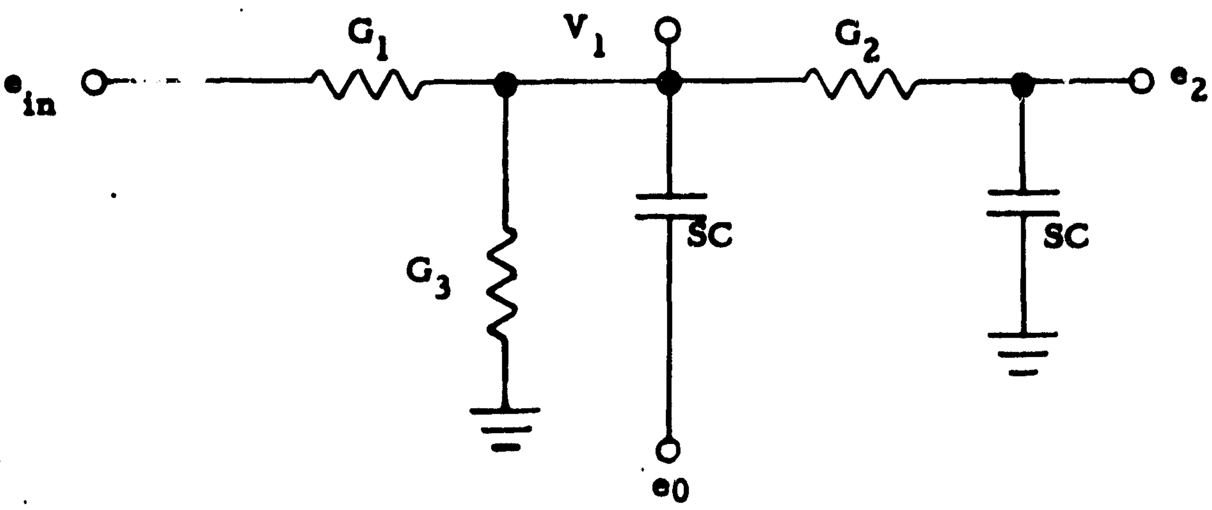

$$e_{in} = e_1$$

$$V1\,(G_1 + G_2 + G_3 + SC) + e_2\,(-G_2) = e_1\,G_1 + e_0\,SC$$

$$V1\,(-G_2) + e_2\,(G_2 + SC) = 0$$

$$e_0 = e_2 = \frac{(G_1 + G_2 + G_3 + SC)\,(0) - (-G_2)\,(e_1\,G_1 + e_0\,SC)}{(G_1 + G_2 + G_3 + SC)\,(G_2 + SC) - (-G_2)\,(-G_2)}$$

$$e_0 = \frac{e_1\,G_1\,G_2 + e_0\,SC\,G_2}{G_2\,G_1 + G_2\,G_3 + SCG_2 + SCG_1 + SCG_2 + SCG_3 + S^2C^2}$$

$$e_0\,(G_1\,G_2 + G_2\,G_3 + SCG_1 + SCG_2 + SCG_3 + S^2C^2) = e_1 G_1 G_2$$

$$\frac{e_0}{e_1} = \frac{G_1\,G_2}{G_1\,G_2 + G_2\,G_3 + SC\,(G_1 + G_2 + G_3) + S^2\,C^2}$$

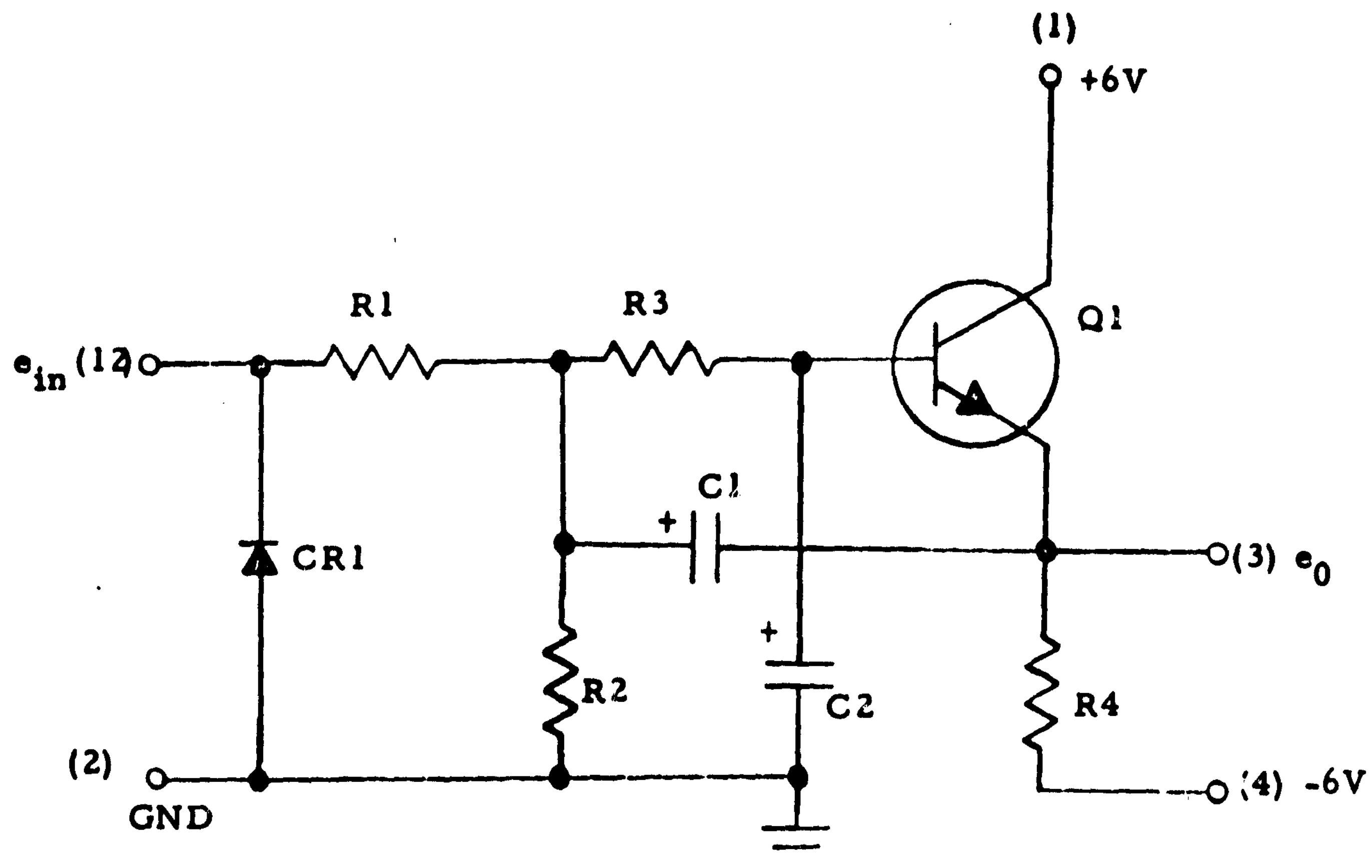

(Reference W4312)

C1 = C2 = .0047 μf
R1 = 100K
R2 = 53.6K
R3 = 34.0K
R4 = 33K
Q1 = FM2484

Figure 94
SCO LOW PASS FILTER SCHEMATIC DIAGRAM

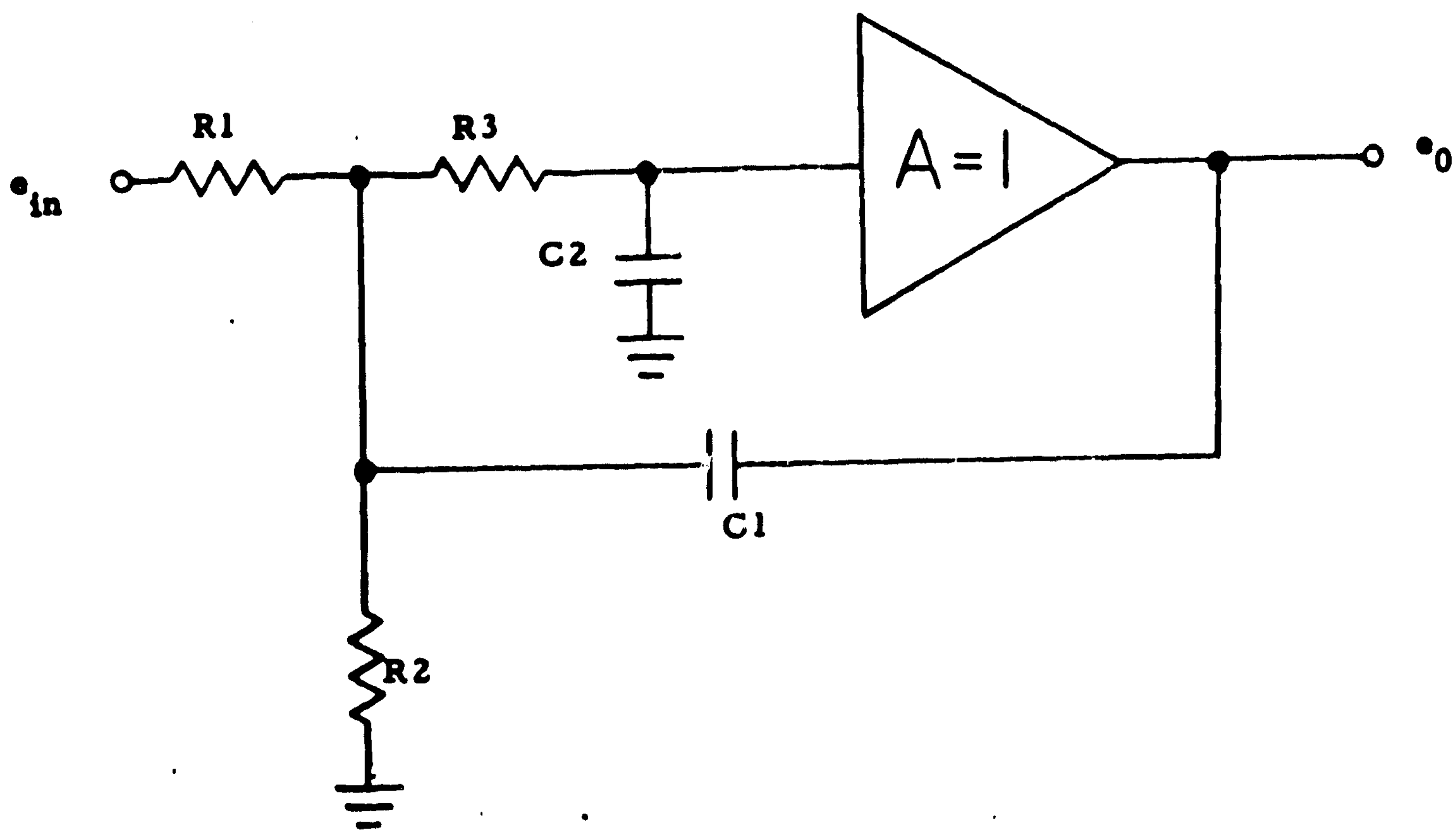

Figure 95
SCO LOW PASS FILTER
SIMPLIFIED EQUIVALENT CIRCUIT

186

$$\frac{e_0}{e_1} = \frac{G_1 G_2/(G_1 G_2 + G_2 G_3)}{1 + SC\left[\frac{G_1 + G_2 + G_3}{G_1 G_2 + G_2 G_3}\right] + S^2\left[\frac{C^2}{G_1 G_2 + G_2 G_3}\right]}$$

This is in the form of

$$\frac{e_0}{e_1} = \frac{A_1}{1 + K_1 T_1 S + (T_1)^2 S^2}$$

$R_1 = 100K$, $G1 = 1 \times 10^{-5}$

$R_2 = 34K$, $G2 = 2.96\ 10^{-5}$

$R_3 = 53.6K$, $G3 = 1.82\ 10^{-5}$

$C = .0047\mu\ C = 47 \times 10^{-10}$

$$A_1 = \frac{G_1\ G_2}{G_1 G_2 + G_2 G_3} = \frac{1}{1 + \frac{G_3}{G_1}} = \frac{1}{1 + \frac{1.82}{1}}$$

$$A_1 = \frac{1}{1 + 1.82} = \frac{1}{2.82} = 0.35 \cong 0.34$$

$A_1 = .34$

$$(T_1)^2 = \frac{C_2}{G_1 G_2 + G_2 G_3} = \frac{C^2 R_2}{G_1 + G_3}$$

$$T_1 = C\sqrt{\frac{R_2}{G_1 + G_3}} = C\sqrt{\frac{34\ 10^3}{2.82\ 10^{-5}}} = C\sqrt{12.05 \times 10^8}$$

$$T_1 = C\sqrt{12.05 \times 10^8} = (C)\ (3.47)\ 10^4$$

$$T_1 = (.0047)\ (3.47)\ 10^{-6}\ 10^4 = (47)\ (3.47)\ 10^{-6}$$

$$T_1 = 163 \times 10^{-6} = 0.163 \times 10^{-3}$$

$$f = \frac{1}{2\pi T_1} = \frac{.1592}{.163\ 10^{-3}} = .98 \times 10^3 \approx 1\ \text{KHz}$$

f = 1 KHz

187

$$K_1 T_1 = \frac{C\left(G_1 + G_2 + G_3\right)}{G_1 G_2 + G_2 G_3}$$

$$= (.0047)\,(10^{-6})\ X \left[\frac{1 + 2.96 + 1.82}{1 X 2.96 + 2.96 X 1.82 X 10^{-5}}\right]$$

$$K_1 = \frac{.0047\,(10^{-1})}{T_1}\ X\ \frac{5.78}{(2.96) + (5.4)}$$

$$K_1 = \frac{.00047}{.000162}\ X\ \frac{5.78}{8.4}$$

$$K_1 = \frac{47}{162}\ X\ \frac{5.78}{8.4} = 2$$

$$2 = K_1, \qquad \zeta = 1$$

Thus $\boxed{\dfrac{\theta_0}{\theta_1} = \dfrac{A_1}{1 + K_1 T_1 S + T_1^2 S^2}}$ ------------------------(1)

Where $A_1 = 0.34$

$K_1 = 2$

$T_1 = 163 X 10^{-6}$ sec.

Equation 1 is the transfer equation shown in Figure 10, page 21, to describe the characteristics of this filter. The tabulation listed on page 172 is a computer print-out of the Theoretical Frequency Response based on Equation 1. The result is also plotted out in graph form on page 173, Figure 96.

OGO F 22 SEARCH COIL
SCO LOW PASS FILTER
THEORETICAL FREQUENCY RESPONSE

ROBERT J NAHABIT
MARSHALL LABS

FREQUENCY	E OUT/E IN	DB GAIN
1	.34	-9.36
2	.339999	-9.36
5	.339991	-9.36
10	.339964	-9.36
20	.339857	-9.36
50	.339111	-9.38
100	.336471	-9.45
200	.326[illegible]9	-9.71
400	.29114	-10.7
500	.269366	-11.38
700	.224576	-12.95
800	.203435	-13.81
1000	.165943	-15.58
1100	.149834	-16.46
1200	.135436	-17.34
1 [illegible]0	.122627	-18.2
1500	.10119	-19.47
1800	7.73[illegible]1 E-2	-22.2
1850	7.41762 E-2	-22.57
200[illegible]	6.54399 E-2	-23.65
2461	4.62415 E-2	-26.66
3000	3.25667 E-2	-29.7
4000	.01912	-34.32
5000	1.24896 E-2	-38.01
7500	5.66667 E-3	-44.37

TIME: 1 SECS.

184

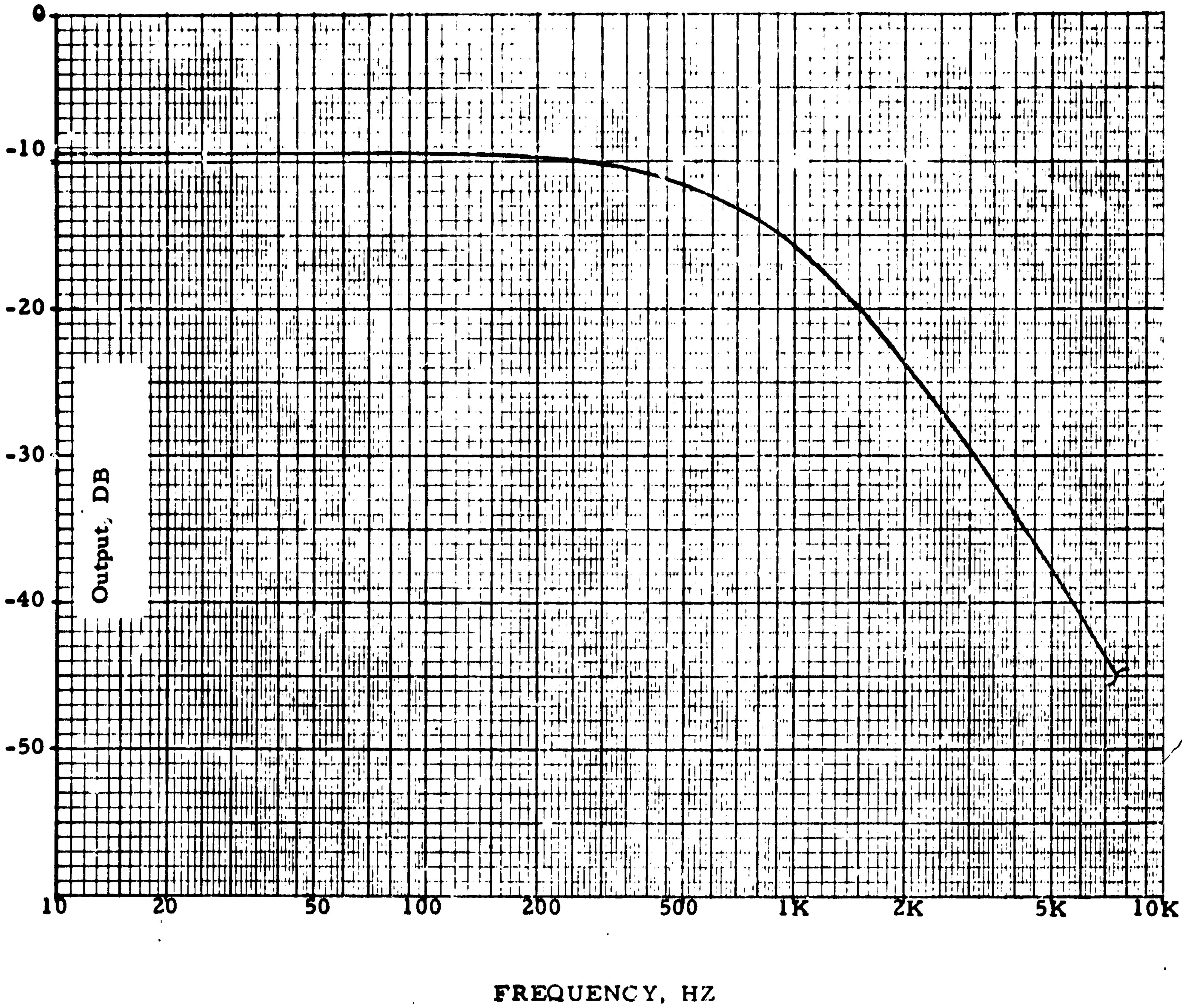

FIGURE 96
SCO LOW PASS FILTER
THEORETICAL FREQUENCY RESPONSE

5.13 Subcarrier Oscillator (SCO)

Figure 97 is a complete schematic of the SCO. Figure 98 is a simplified schematic of the SCO. The SCO consists basically of a free running multivibrator composed of switching transistors Q1 and Q2, current sources I1 and I_2, and timing capacitors C1 and C2. Figure 99 is a timing diagram showing the voltage waveform within the SCO. The output voltage is a square wave which later has its upper harmonics filtered and rejected by a wideband telemetry filter. The frequency of the output signal is dependent upon T_1 and T_2 which in turn are dependent upon current sources I_1 and I_2. I_1 and I_2 are both made to vary simultaneously about their quiescent value by an amount proportional to the instantaneous value of the input signal voltage. Thus, the frequency of the output varies about its quiescent value (center frequency) by an amount proportional to the instantaneous value of the input signal voltage. The change in output frequency per volt of input signal is termed modulation index. The requirements of a high performance SCO are: High stability of the center frequency, high stability of the modulation index, and linearity of the modulation index over a full dynamic range. This stability is with regard to changes in temperature (-15 to +55°C), power supply voltages, and component variations. The SCO should be designed such that the center frequency and modulation index can be easily and quickly set up or trimmed to their proper values. The SCO shown in Figure 97 yielded actual center frequency stability on production units for temperature changes from -15°C to +55°C as follows:

40 KHz: $f_{o/25^oC}$ = 40,142, drift = 129, stability = ±0.16%

52.5 KHz: $f_{o/25^oC}$ = 50,255, drift = 135, stability = ±0.14%

70 KHz: $f_{o/25^oC}$ = 69,046, drift = 229, stability = ±0.17%

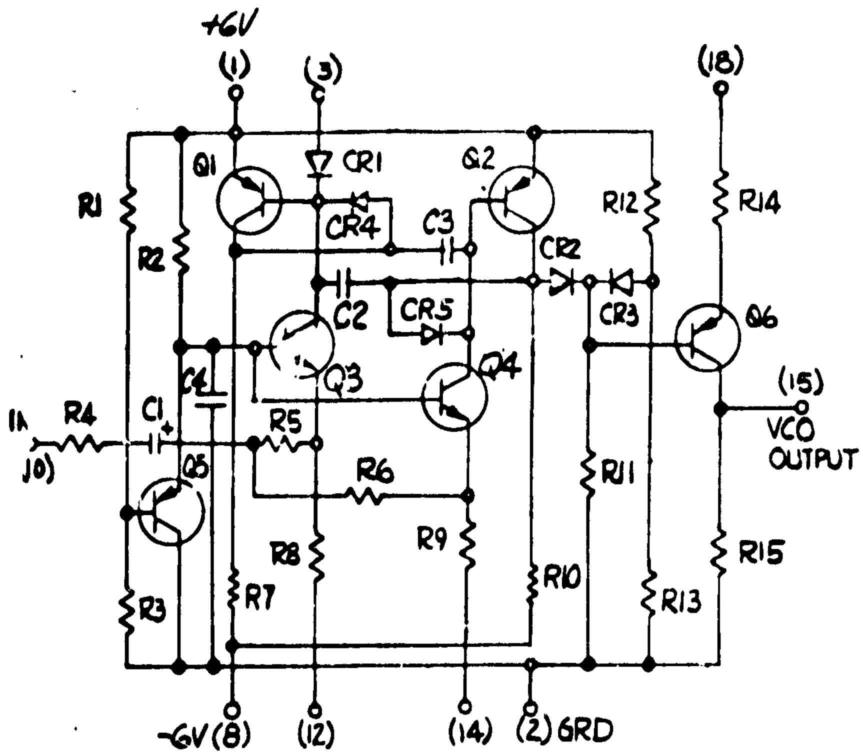

(Reference W4546)

C1 = select	R1 = 100K
C2 = C3 = select	R2 = 68K
C4 = 10,000 pf	R3 = 90.9K
Q1 = Q2 = 2N2945	R4 = 10Ω
Q3 = Q4 = FM2484	R5 = R6 = R13 = 30.1K
Q5 = Q6 = ML 20001	R7 = R10 = 6.8K
	R8 = R9 = 12.4K
	R11 = 220K
	R12 = R15 = 10K
	R14 = 3.92K

Figure 97
SCO Schematic Diagram

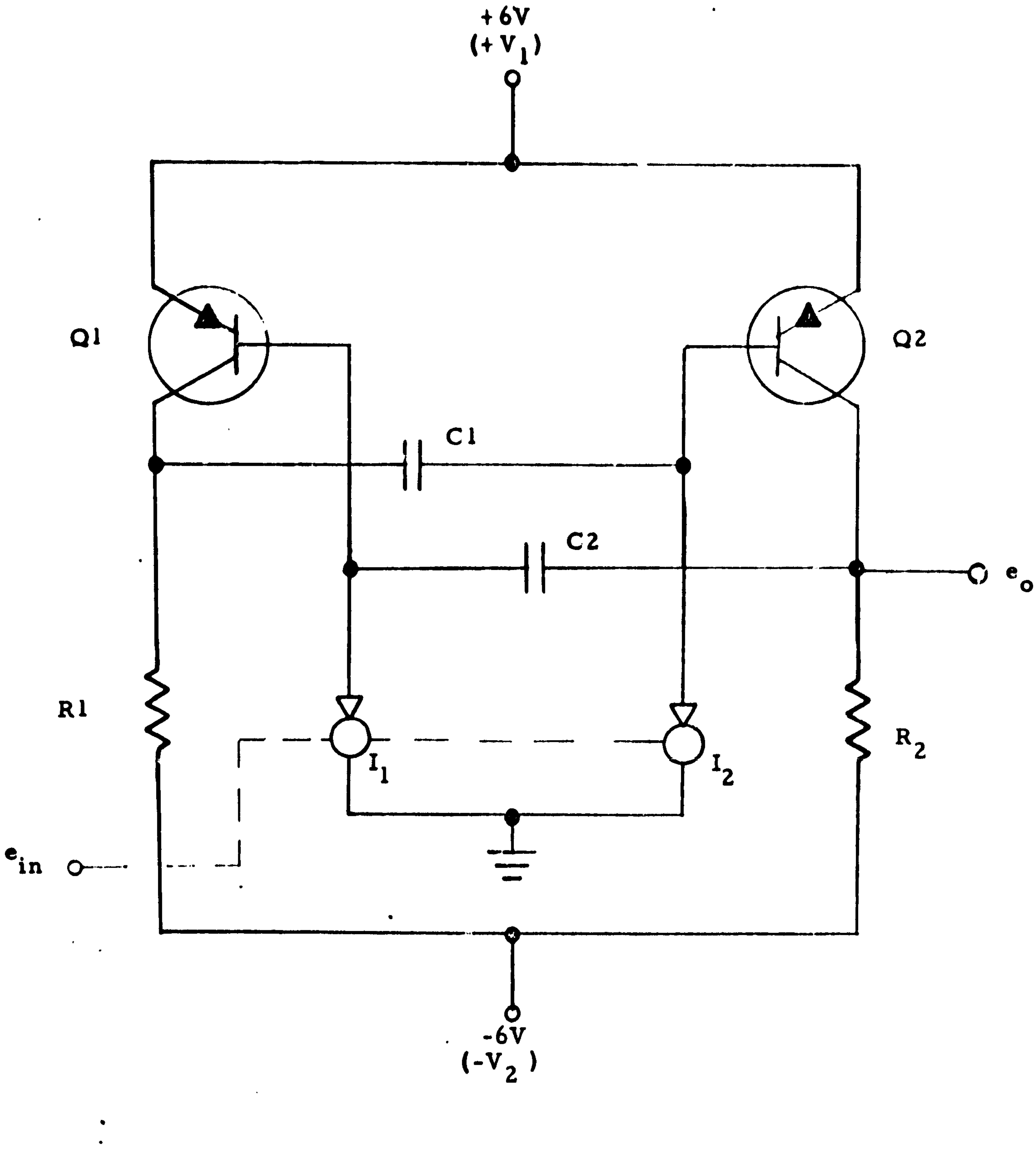

Figure 98
Simplified SCO Schematic Diagram

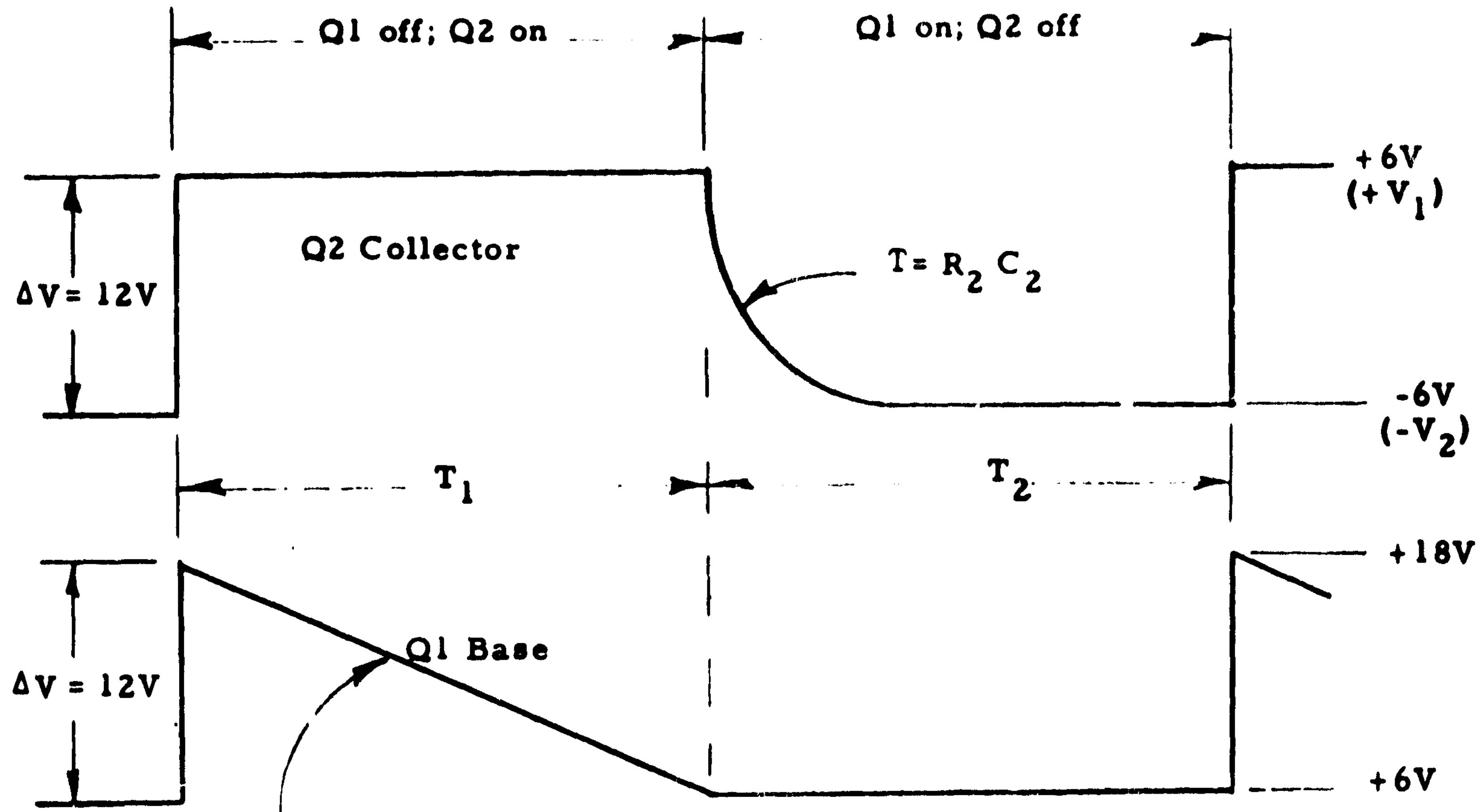

Slope $= \dfrac{\Delta V}{\Delta T} = \dfrac{I}{C} =$ Constant

Given by $e = \dfrac{1}{c} \int i \, dt$

$$\Delta V = \frac{I}{c} \Delta T , \quad \frac{\Delta V}{\Delta T} = \frac{I}{C}$$

$$T_1 + T_2 = T_3$$

$$T_3 = \frac{1}{f}$$

where f is in the frequency of oscillation of the SCO.

Figure 99

SCO Timing Diagram

V_{be} Reverse Voltage of Q1 and Q2

As can be seen in Figure 99, during time period T_1, Q_1 is off, and yet V_{be} is reversed biased up to 12V. The 2N2945 was chosen for Q1 and Q2 because its reversed V_{be} is specified at 20V. Most silicon transistors exhibit V_{be} reverse values of 5V. These transistors could be used if ΔV was designed to be less than 5V, but the larger the ΔV, the better the stability, since Δ V is composed of the supply voltages less the Q1 and Q2 on voltages. The variation of Q1 and Q2's on voltage is relatively fixed. It therefore, has less overall drift effect as ΔV is increased (by increasing the power supply voltages). The limit of increasing ΔV is given by the V_{be} breakdown (less a safety factor). In this case ΔV was chosen by 12V.

Turn Off Time (Q1 - Q2)

For SCO operation in the 70 KHz region the period T_1 in Figure 99 is approximately 7 microseconds. Thus switching and delay storage times must be very short, and they must not vary appreciably with temperature. For 0.1% stability the variation in total transistion time must be less than 7 nano seconds over the total temperature range. In SCO's used on OGO-E and before, the circuitry was such that Q1 and Q2 saturated when turned on, but saturated transistors exhibit storage time delays of about 1 microsecond, and these delays are very temperature dependent. In this SCO (OGO-F) anti-saturation diodes were added as shown in Figure 100. The diode was pre-selected so that its on voltage was always less than the V_{be} on voltage of Q1. The emitter to collector voltage ($V_{ce\ on}$) is, then, the difference between (V diode $_{on}$), and ($V_{be\ on}$). It is approximately 100 to 200 millivolts. This difference (V_{ce} on) is relatively constant with temperature since as (V diode on) increases so does V_{be}. Both increase at the rate for silicon junctions, about 2.2 millivolt/degree C. CR1 and CR2 have been pre-selected from all diodes used in the instrument for lowest V_{on} at I = 100 μa.

Current Sources I_1 and I_2

Frequency stability is also dependent upon the DC stability of I_1 and I_2. Figure 101 is a schematic of the I_1 and I_2 current sources. The quiescence (DC) value of I_1 is given by:

$$I_1 = I_{R8} - I_{bQ3}$$

$$I_{R8} = \left| \frac{V_2 - V_{eQ3}}{R_8} \right|$$

195

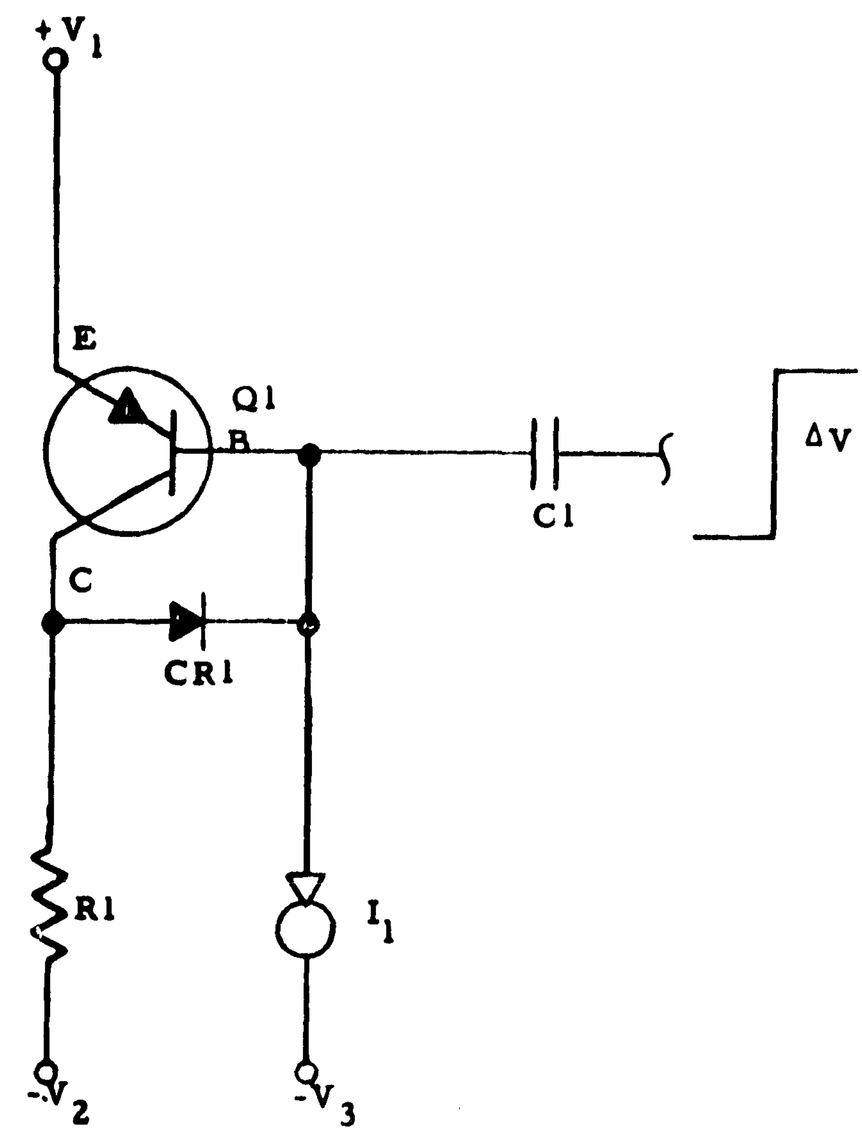

Figure 100
SCO Anti Saturation Diode Circuit

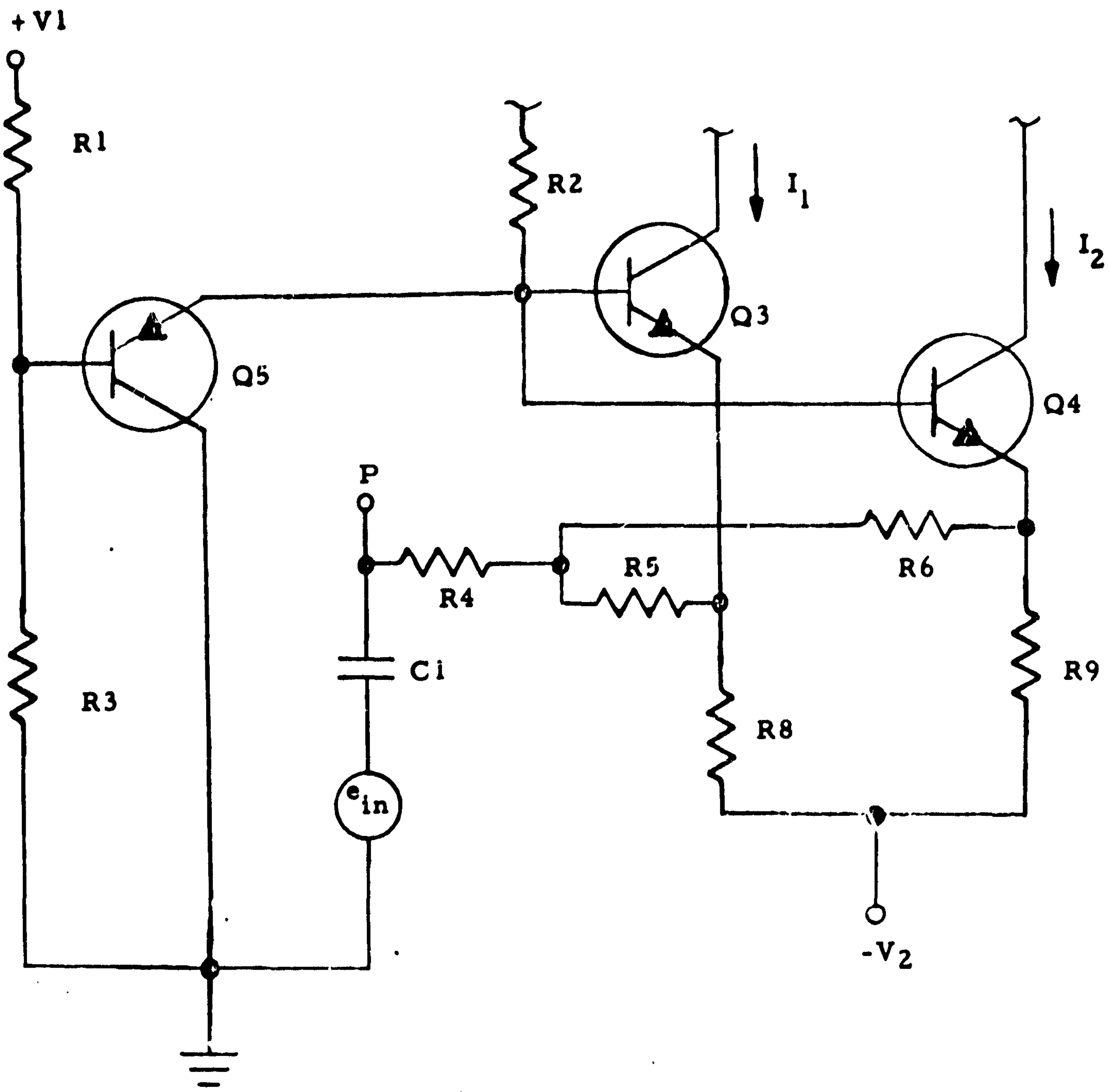

Figure 101
SCO Simplified Current Sources Schematic

V2 and R8 are quite stable. VeQ3 is stable also if $\Delta V_{BEQ5} = \Delta V_{BEQ3}$
The larger V2 becomes, the less the effect of changes in V_{eQ3}.
Thus, R8 and R9 should be returned to a large negative voltage. In OGO-F it is -6V DC. In subsequent units it should be -20V DC. Center frequency is trimmed by adding two resistors in series with R8 and R9.

$$I_{Q3\ Base} = \frac{I_c}{H_{fe}} \text{ and } \Delta I_{Q3\ Base} = \frac{I_c}{\Delta H_{fe}}$$

$$(I_c = I_1)$$

H_{fe} is in the order of 300 and for -15°C to +55°C can vary as much as 50%. H_{fe} becomes lower as temperature drops. Test data indicates that frequency drift per degree C was much larger below 0°C than above +40°C which probably was due to the decrease of H_{fe} with temperature. For future design the effect of dynamic collector to emitter resistance, h_{oe} should not be overlooked. Most of the frequency drift present in the SCO can be considered to be dependent upon H_{fe} changes in Q_3 and Q_4 with temperature.

In future design perhaps a FET can be used for I_1 and I_2.

Modulation

Input e_{in} varies currents I_1 and I_2 simultaneously, thus changing T_1 and T_2 in Figure 99 which changes the instantaneous frequency (i.e., FM modulation). Modulation of ± 15% (I ± 0.15 I) due to e_{in} is achieved with good linearity. In new SCO module designs, point P should be brought out so that a DC voltage can be applied and frequency deviation can be set up with a frequency counter (by varying R4). At present a calibrated frequency discriminator must be used to set up modulation index.

5.14 SCO Output Amplifier

Figure 102 shows the schematic diagram and parts list for the SCO output amplifier. The amplifier sums the three SCO outputs and provides a low impedance output to the spacecraft special purpose telemetry. The gain of the amplifier is 0.33 for any one signal or 1 for the sum of three such that the summed signals will be within 5 volts peak to peak.

Transistor Q1 is a common emitter amplifier followed by transistor Q2, a ground base stage for high frequency characteristics. The output stage is a complementary PNP-NPN emitter follower stage for dynamic output impedance and to conserve quiescent power.

The modulated input signals of 40K Hz, 52.5K Hz, and 70K Hz are summed by resistors R3, R10, and R11 with feedback resistor R5.

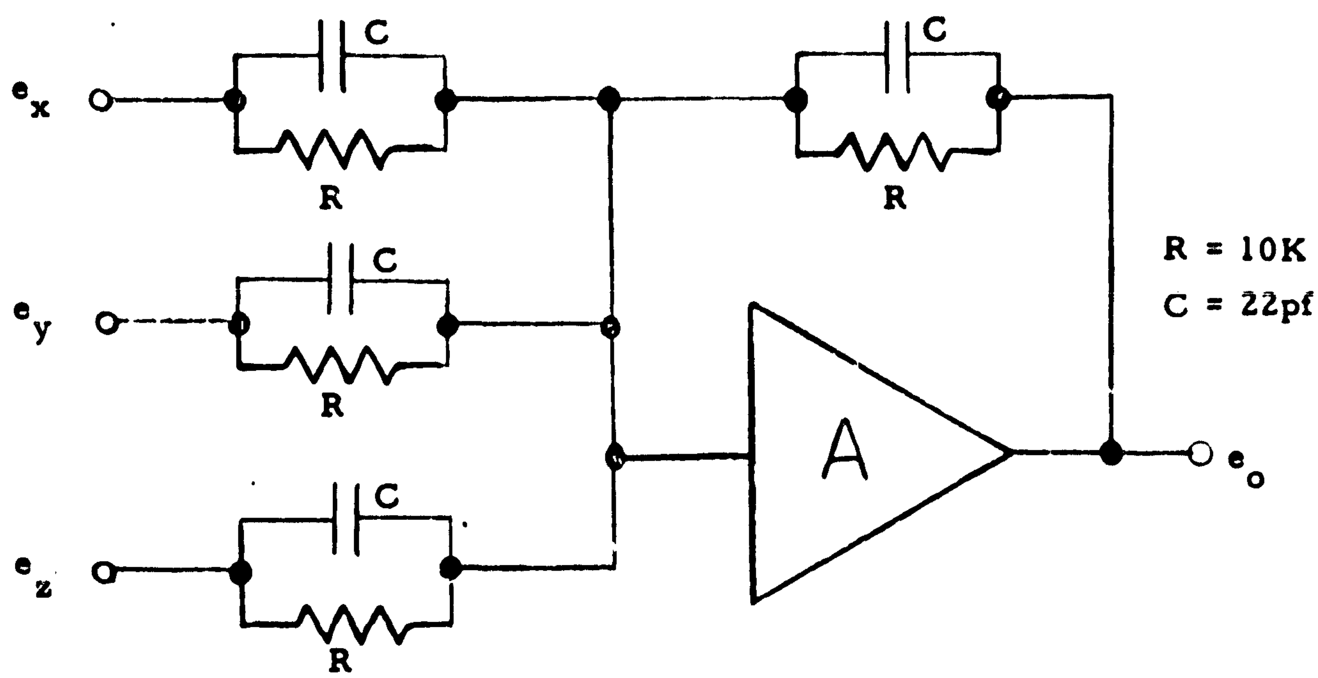

The gain is characterized by the following equation:

$$G = \frac{e_o}{e_x + e_y + e_z} = \frac{R5}{R}$$

If R3 = R5 = R10 = R11 = 10K = R

Then $$G = \frac{10K}{10K} = 1$$

Capacitors C3, C4, C6 and C9 are for neutralization to obtain a flat frequency response to greater than several hundred kilohertz.

Decoupling network of R1 - C1, and R2 - C2 are employed on the ± 5 volts supply line to prevent the SCO frequencies from entering the system and causing noise problems.

199

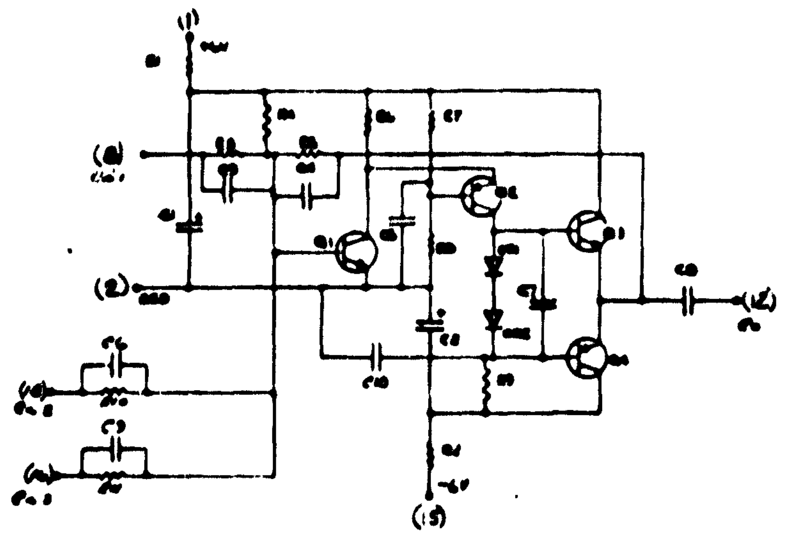

(Reference W4531)

C1 = C2 = 3.3µf	R1 = R2 = 100 ohm
C3 = C4 = C6 = C9 = C10 = 22pf	R3 = R5 = R10 = R11 = 10K
C5 = C7 = 0.01µf	R4 = 240K
C8 = 0.1µf	R6 = 3.3K
Q1 = FM2484	R7 = 51K
Q2 = Q4 = ML20001	R8 = 68K
Q3 = FM3300	R9 = 18K

FIGURE 102
SCO OUTPUT AMPLIFIER SCHEMATIC

5.15 Waveform Mode Switch

Figure 103 shows a detailed schematic of the waveform mode switch. Figure 104 shows a simplified schematic of the waveform mode switch. On Figure 104 the two inputs E_a and E_b drive gates of field effect transistors Q_A and Q_B.

Only one of the transistor pairs is ON at any one time. The other transistor pair is in the cut-off state. The state of the transistor pairs is determined by transistor switch S1. S1 can either be in position A or in position B. Switch S1 is controlled by the logic control input voltage which swings between 0 and +5 volts DC. As shown S1 is connected to point A and field effect pair Q1 is energized. Field effect pair Q2 has no return to -6 volts for its source, thus, +20V passing through R18 tends to drive the source of the field effect transistor pair Q2 positive with respect to +2.5 volt reference. This effectively puts pair Q2 into the cutoff region. When S1 is in position B, Q1 is cut off in a similar fashion, thus only one pair of FET's drive current into drain resistors R_4 and R_5. The signal, then, is amplified by amplifier A, and the output is fed back into Q1 and Q2's other gates simultaneously. The overall effect is that of a follower amplifier with unity gain. Essentially, the circuit is equivalent to a single pole double throw switch connecting either point E_a directly to E_o or connecting E_b to E_o. E_a and E_b see a high input impedance at all times. There is a low output impedance seen looking back into output point E_o. As the module stands alone, points E_a and E_b which are pins 17 and 18 on module W4524 have no gate resistors to +2.5 VDC. When this module is connected in the blivet assembly, these inputs see a minimum of 22 Megs to +2.5V (AC ground), the 22 Meg resistors are located in the Fixed Gain Amplifiers.

Refer to the detail schematic, Figure 103, you will notice that at the output line there is a capacitor C2 to -6V by passing R10. It is recommended that in the future this capacitor be returned to ground not to -6V. At present any high frequency noise on the -6V line couples through C2 to the output. When testing this module, during module test, or during engineering evaluation, the input source impedance that the input gates see should be low. Inputs should be AC coupled into the gates with a generator impedance below the order of 10K. Otherwise, residual oscillations may be present. When this circuit is in the blivet, although there is a net 22 meg D.C. impedance to ground at one gate the AC impedance is quite low. It is driven by the variable low pass filter which always has a capacity of .018 μf to ground. The other input is driven from the output of the fixed gain amplifier which has a very low dynamic impedance.

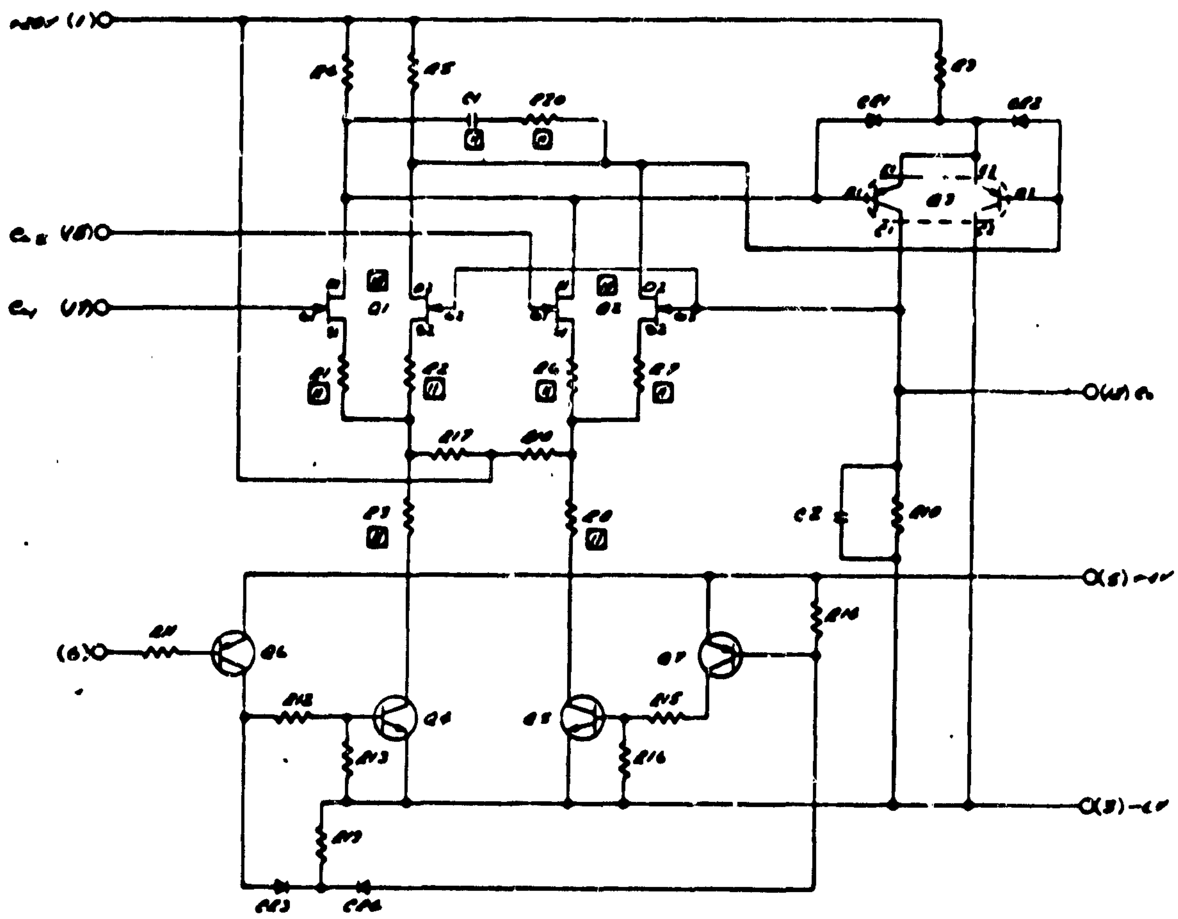

(Reference W4524)

C1 = 120 pf
C2 = 1000 pf
Q1 = Q2 = 2N3954
Q3 = 2N4024
Q4 = Q5 = FM 2484

R1, R2, R3, R6, R7, R8 = Select
R4 = R5 = 45.3K
R9 = 20K
R10 = 62K
R11 = R14 = 43K
R12 = R15 = 91K
R13 = R16 = 51K
R17 = R18 = 22 Meg
R19 = 100K
R20 = 100Ω

Figure 103
Waveform Mode Switch Schematic

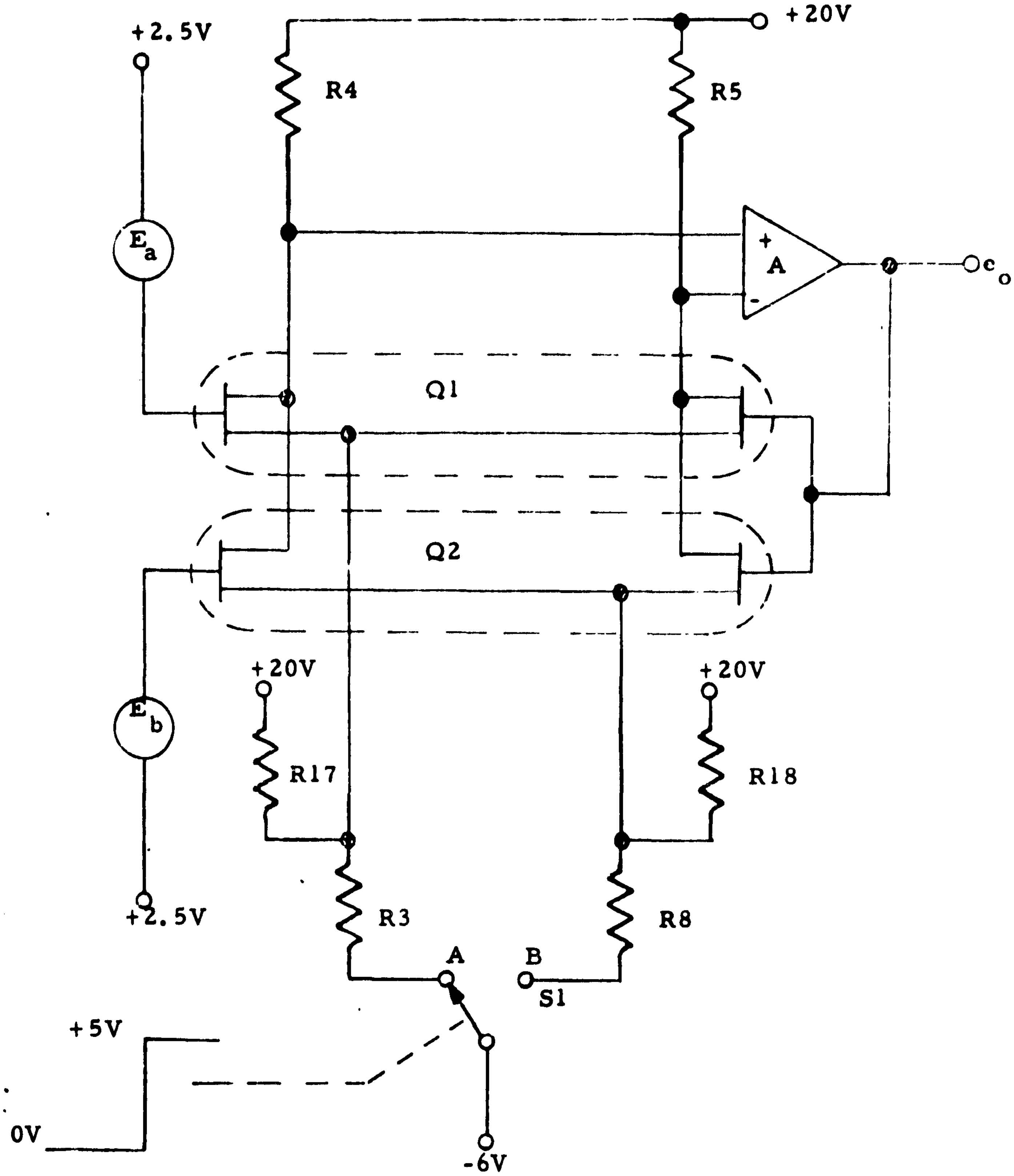

Figure 104
Waveform Mode Switch Simplified Schematic

5.16 Impulse Latch

The Impulse Latch circuit diagram is shown in detail in Figure 105. The Impulse Latch Circuit is used to interface the five ground impulse command signals. The signals are Waveform Gain Change, Spectrum Gain Change, Mode Change, SCO On-Off, and IFC On-Off. Resistor-capacitor network (R1-C1) at the input affords impedance isolation and forms a 16 millisecond delay circuit that prevents relay contact bounce from false triggering the command circuits.

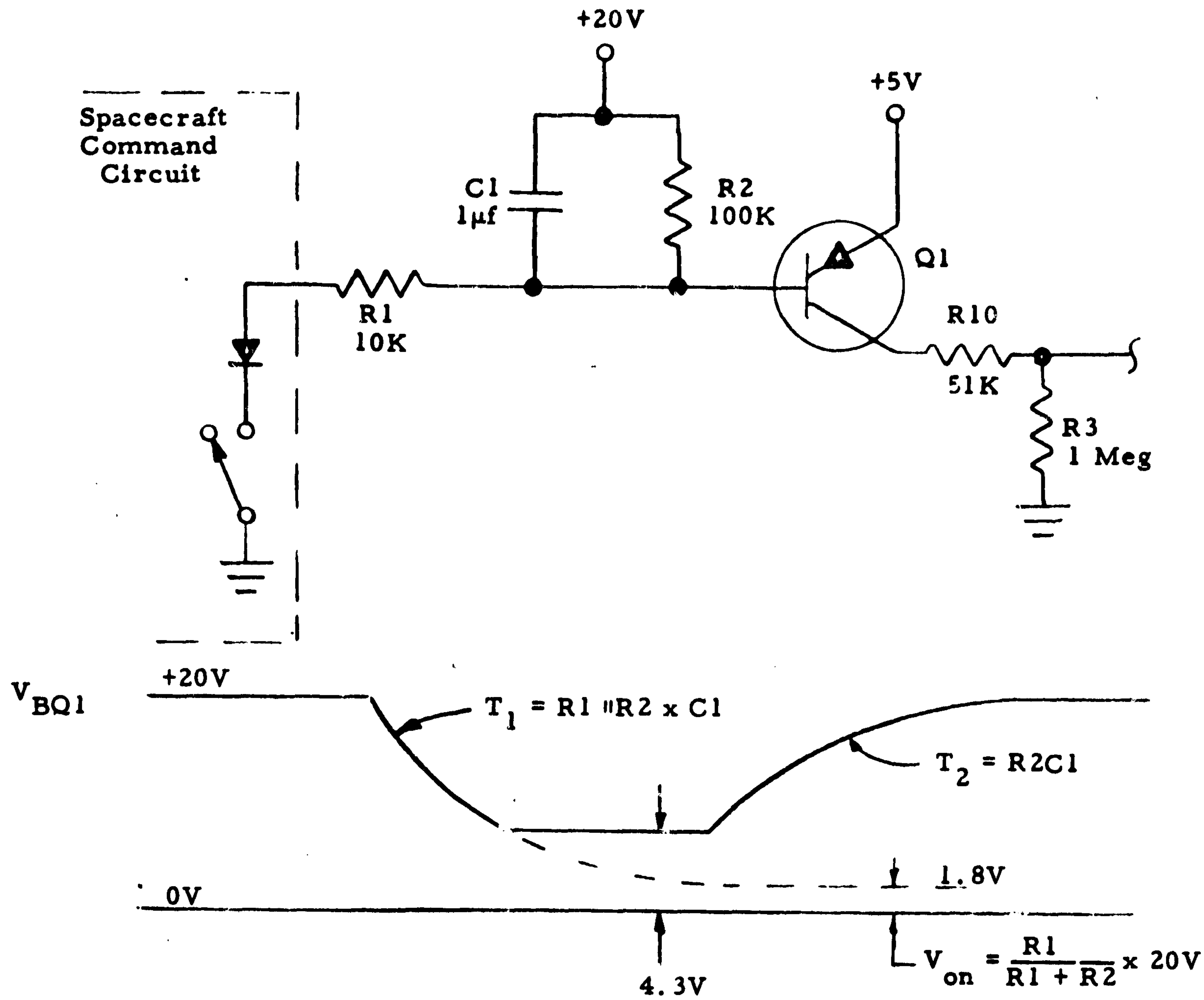

When R1 is connected to ground, via the spacecraft command relay, capacitor C1 begins to charge. After approximately 16 milliseconds, the voltage across C1 will exceed 15.3 volts which will threshold the inverter amplifier Q1.

0 68-164

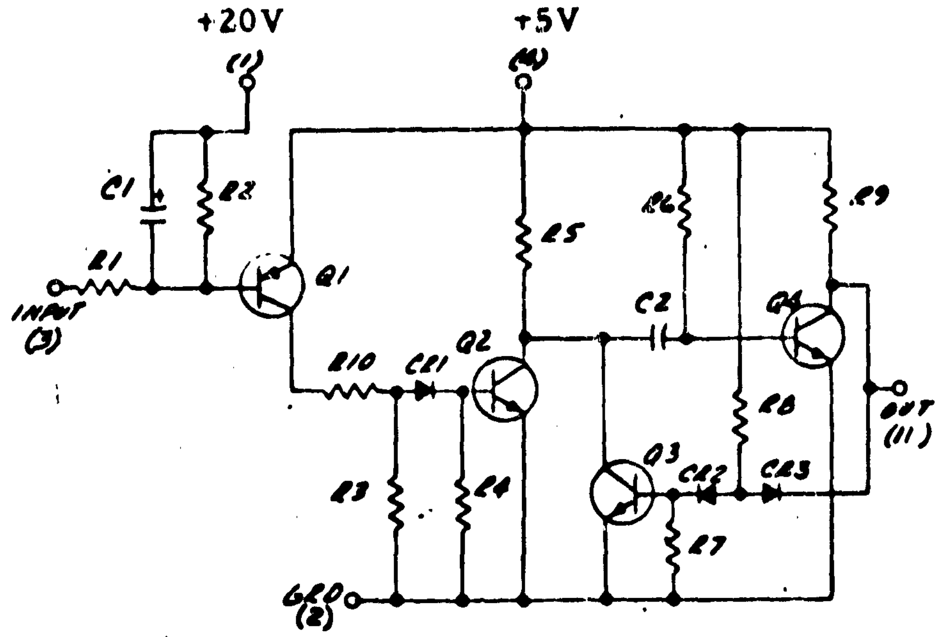

(Reference W4544)

C1 = 1µf	R1 = 10K
C2 = .0015µf	R2 = 100K
Q1 = 2N2945	R3 = R4 = 1 Meg
Q2 = Q3 = Q4 = FM2484	R5 thru R10 = 51K

FIGURE 105
IMPULSE LATCH SCHEMATIC DIAGRAM

For contacts closing:

$$V_{BQ1} = \frac{R1 \times 20V}{R1 + R2} + \left[20V - \frac{R1 \times 20V}{R1 + R2}\right] e^{-\frac{t}{T_1}}$$

where $C1 = 1\mu f$

$R1 = 10K$

$R2 = 100K$

$$T_1 = \frac{R1 \times R2 \times C}{R1 + R2} = 9.09 \times 10^{-3}$$

$V_{BQ1} = 4.7v$ assuming Q1 turns on with $V_{be} = -0.3v$

$$4.7 = 1.82 + (20-1.82)\, e^{-\frac{t}{T_1}}$$

$$2.9 = 1.82\, e^{-\frac{t}{T_1}}$$

$$\frac{2.9}{1.82} = .16 = e^{-\frac{t}{T_1}}$$

$$-\frac{t}{T_1} = -1.78 \quad \text{where } T_1 = 9.1 \text{ msec}$$

$$t = 1.78 \times 9.1 \text{ msec} = 16 \text{ msec}$$

A 16 millisecond delay was chosen in order to allow the spacecraft impulse command relay contacts to bounce for a period of 3 milliseconds and to hold for at least 50 milliseconds.

Once Q1 conducts, it triggers a monostable multivibrator, Q2-Q3. This latch circuit produces ≈ 50 microsecond pulse which drives the instrument logic circuits.

206

5.17 IFC Attenuator

The IFC Attenuator is illustrated below, Figure 106, in the simplified form. The IFC signal is produced for a period of 128 seconds of which the first 64 seconds is 3 millivolts peak to peak and the second 64 second period is 30 millivolts peak to peak. While the IFC signal is present for 128 seconds, it is the purpose of the IFC attenuator to produce the proper amplitude signal at the right time. In the actual circuit, Figure 107, S1 and S2 are replaced by Q1-Q2 and Q3-Q4, respectively. In each pair of transistors at any moment, one transistor is acting in an inverted mode and the other in the conventional manner. The purpose of the pair is to accomodate both positive and negative amplitude IFC signals.

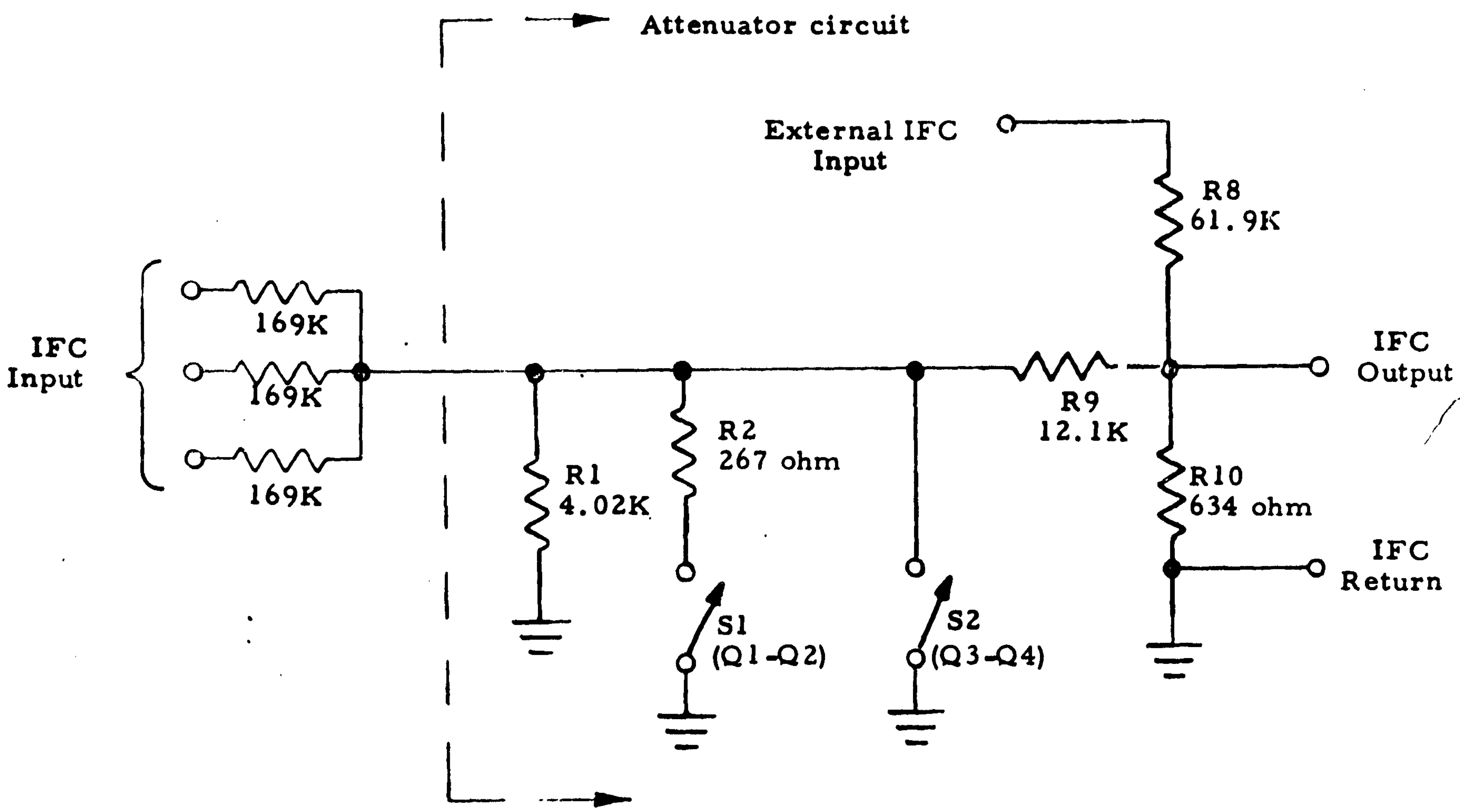

FIGURE 106
IFC ATTENUATOR SIMPLIFIED CIRCUIT

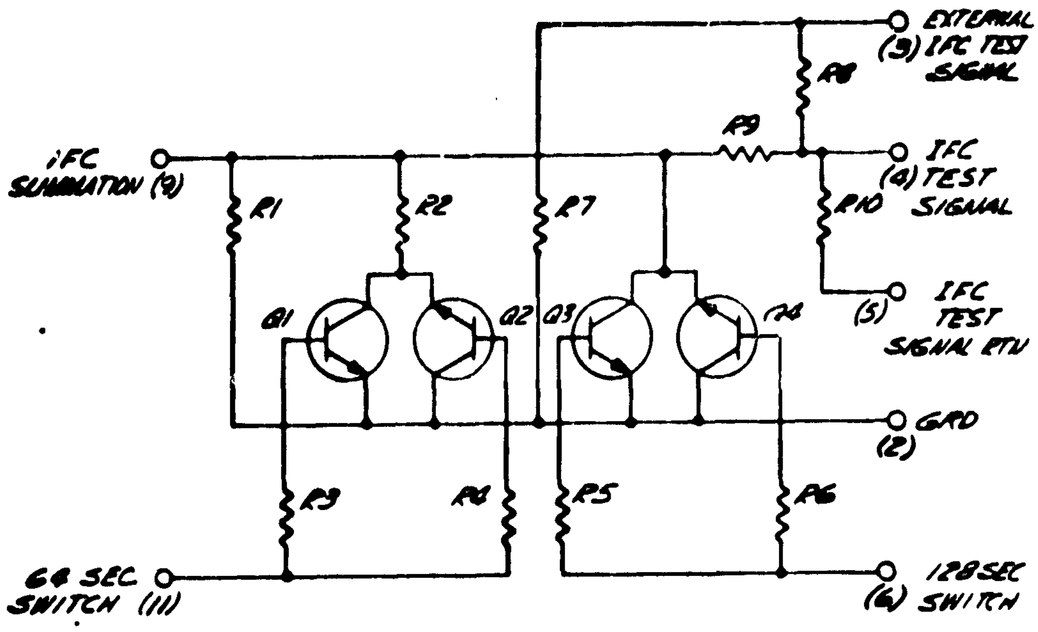

(Reference W4536)

R1 = 4.02K

R2 = 267ohm

R3 = R4 = 68K

R5 = R6 = 39K

R7 = R10 = 634 ohm

R8 = 61.9K

R9 = 12.1K

Q1 thru Q4 = FM3300

FIGURE 107
IFC ATTENUATOR SCHEMATIC DIAGRAM

When both S1 and S2 are "open", the attenuation of the IFC signal is:

$$\frac{\left[\frac{169K}{3} + \frac{R1 \times (R9 + R10)}{R1 + R9 + R10}\right]}{\left[\frac{R1 \times (R9 + R10)}{R1 + R9 + R10}\right]} \times \frac{R9 + R10}{R10} = 391$$

which yields an IFC signal in the order of 31 millivolts p-p from the ± 6v peak to peak signal from the IFC signal forming circuits. When switch S1 closes (Q1-Q2 saturation resistance approximately 15 ohms) the equivalent circuit is:

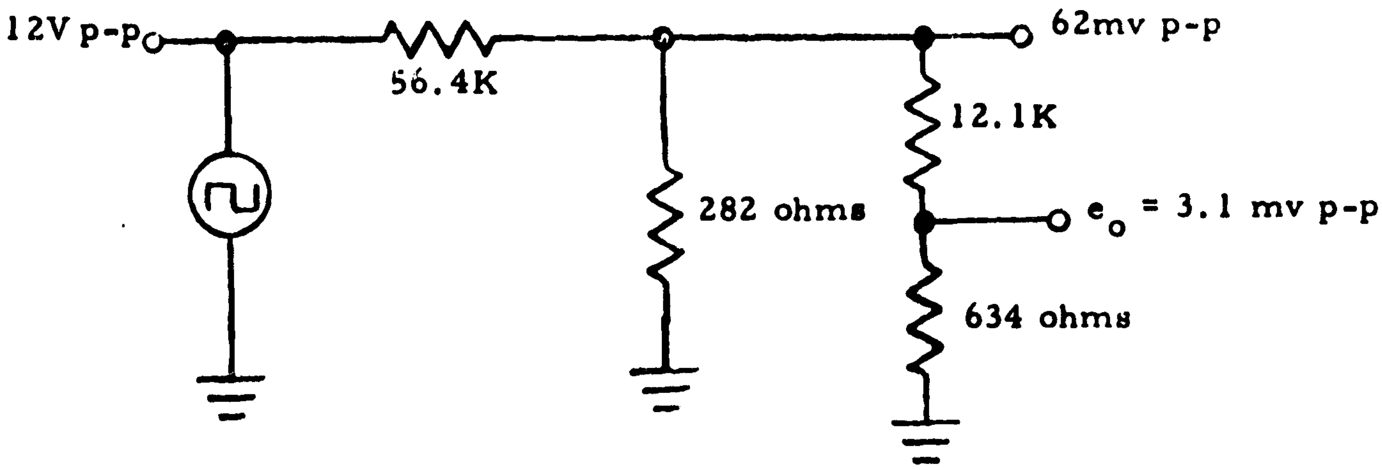

At the completion of the IFC sequence, S2 closes to shunt any d-c component to ground.

5.18 Sync Amplifier

The Sync Amplifier is used to buffer the 2461 Hz sync signal from the spacecraft. It also enables the power supply to meet the interface requirements for this signal.

Figure 108 shows the sync amplifier circuit schematic. The circuit utilizes a transformer coupled amplifier. The amplifiers are a complementary pair which use the pre-regulated voltage (+22 volts) as their supply.

A square wave synchronization signal of 3 volts peak to peak will sync the instrument's power supply. The input impedance for the synchronization signal is greater than 9000 ohms.

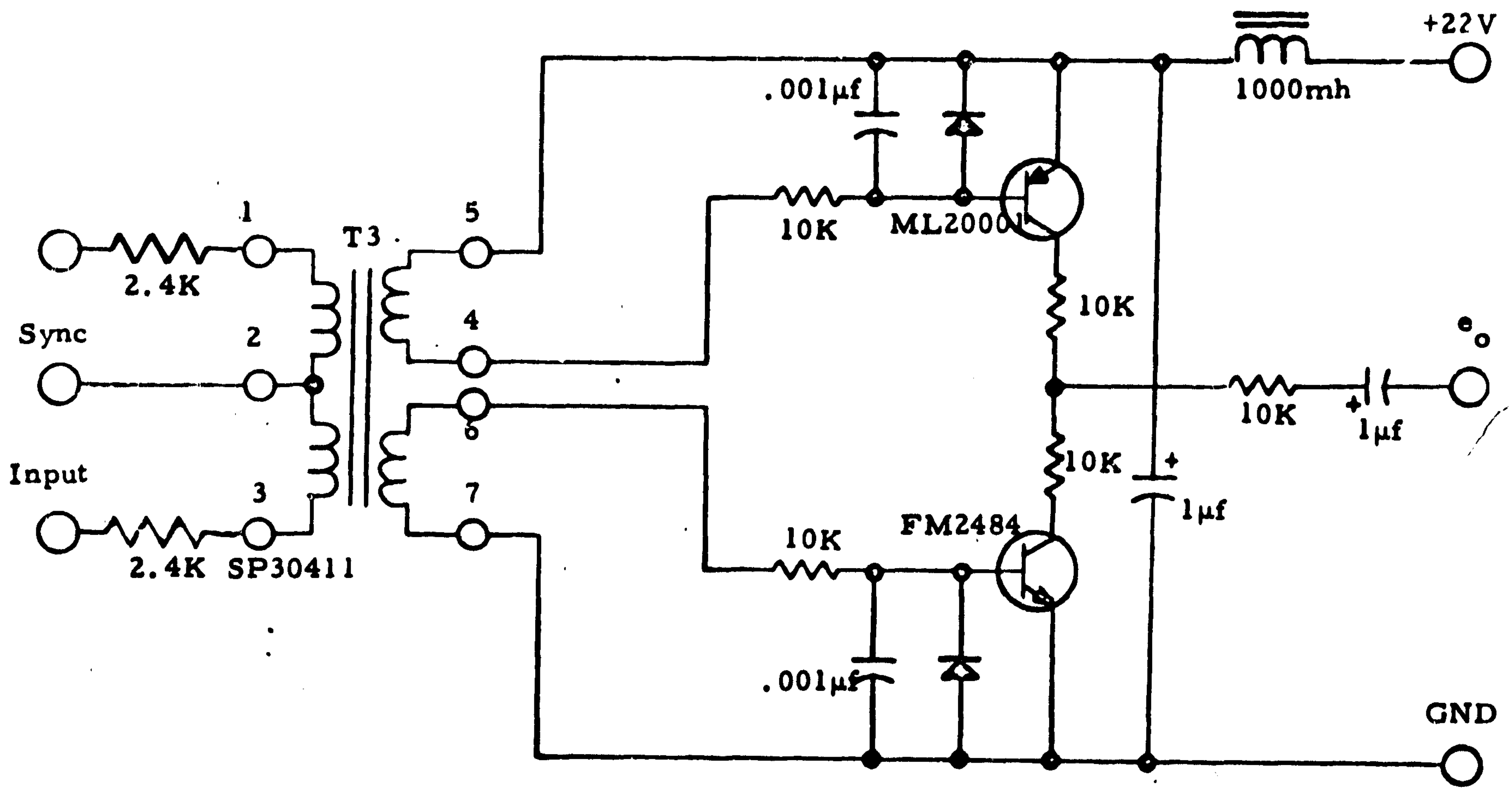

(Reference W4290)

FIGURE 108
SYNC AMPLIFIER SCHEMATIC DIAGRAM

910

5.19 Power Supply Converter

The operation of the converter is discussed under three major headings: Turn On, Oscillation, and Synchronization. Refer to Figure 109 for the discussion. Figure 110 is the detailed circuit diagram of the converter Module, W4347.

Turn On

Upon turn on, +22 volts is applied to the emitter of Q 1 and pin 2 of T1. Since the circuit has been off there is no voltage across C6, hence Q1 turns on and drives current into the base of Q2, turning Q2 on. While Q2 is holding pin 1 of T1 at essentially ground, pin 3 of T1 is sent to twice B+ (+44 volts). This charges C1 to +44 volts which is applied to the R3-R4 network, thus a voltage greater than +22 volts appears at the base of Q1, which turns it off. This insures a "sure start" of the converter circuit (Q 2-Q3).

Oscillation

The +44 volts appearing across pins 1 and 3 of T1 are coupled via the 9.05K resistors to pin 1 and 2 of T2 (the feedback winding) of T2. This voltage at pins 1 and 2 of T2 induces a voltage at pins 5-6 and 6-7 of T2 such that pin 5 goes positive and pin 7 goes negative turning on Q2 and holding off Q3. After a specified time the current in the winding 1-2 of T1 reaches a level such that T2 is saturated, ie. $(N_{12}) (I_{12}) \leq (NI_{\text{saturation for T2}})$ at which time the voltage at pins 5 and 6 of T2 drops to zero. This kills the base drive to Q2, and it starts to cut off. This removes the short to ground at pin 1 of T1, causing the voltage at pin 1 to rise toward +22 volts (and causing the voltage at pin 3 of T1 to drop toward +22 volts). This couples a step voltage of such polarity to the feedback winding of T2 such that it removes it from saturation and couples a negative voltage to pin 5 of T2 and a positive voltage to pin 7. This cuts off Q2 and turns Q3 on. This state is maintained until the current in pins 1 and 2 of T2 once again reaches a level to cause T2 to saturate and the whole process is repeated over and over. Thus, oscillation occurs.

Synchronization

The sync input signal couples currents into the sync winding (pins 3-4 of T2) to aid or retard the feedback winding current such that syncronization betw een the feedback winding voltage and the sync voltage occurs. These two square waves are of the same frequency but nominally at a phase difference of 90°; ie., when $(f_{in} = f_{\text{free run of converter}})$.

211

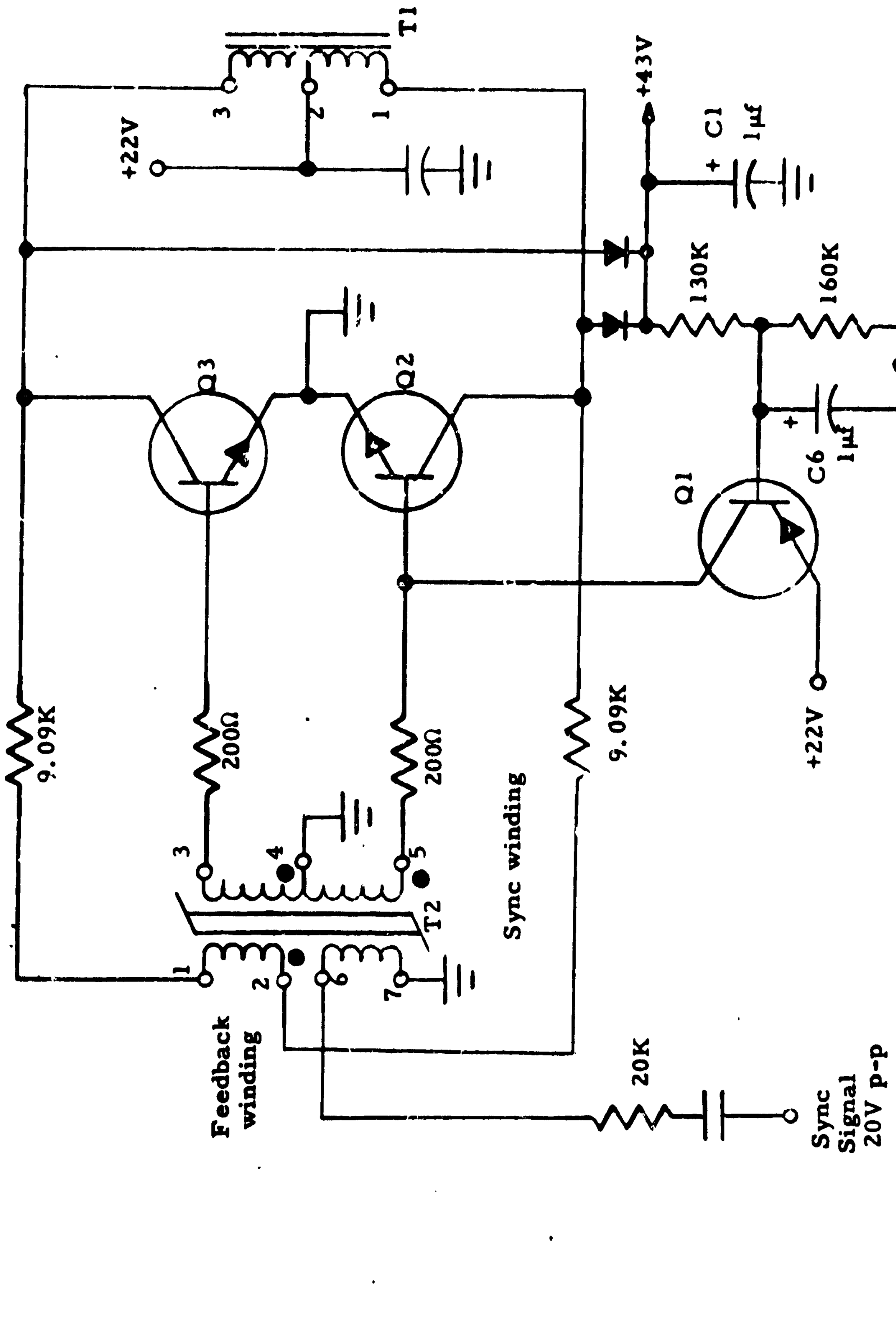

FIGURE 109
CONVERTER SIMPLIFIED SCHEMATIC

212

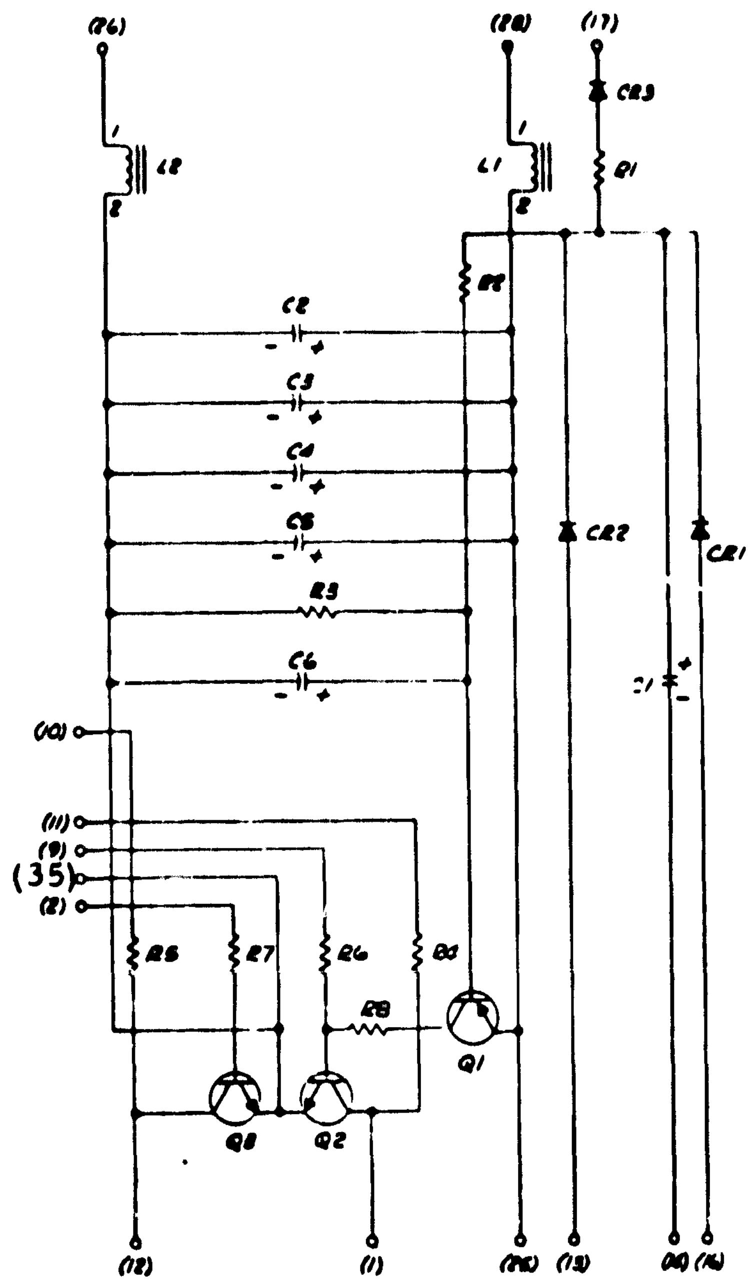

(Reference W4347)

R1 = 330 Ohms
R2 = 130K
R3 = 160K
R4 = 9.09K
R5 = 100K
R6 = R7 = 200Ω
R8 = 3.9K

C1 = C6 = 1 μf
C2 thru C5 = 4.7 μf
L1 = L2 = 280 μf
Q1 = ML20001
Q2 = Q3 = 2N2033

FIGURE 110
CONVERTER MODULE SCHEMATIC DIAGRAM

5.20 Power Supply Preregulator

The power supply preregulator consists of a series voltage regulator that provides stable operating voltage to the d-c to d-c converter ensuring reliable operation. The circuit is relatively straight forward, see Figure 111. CR3, a Zener diode, provides the reference voltage to Q3, a differential amplifier, which drives Q1, Q2, and Q4. Voltage divider R7 and R9 is selected to set the output voltage to +22.0v d-c. The collector voltage supply, +43 volts, for Q1 and Q2 is provided by an isolated source which is higher than that for Q4. The higher potential allows Q4 to operate at a low collector voltage which minimizes power loss. Q4 is mounted on the housing for heat dissipation.

In order to stay within the spacecraft's turn-on surge current requirements, Capacitor C2 is introduced into the circuit. The turn-on sequence is as follows: At time T=0 capacitor C2 has zero volts across it and begins to charge up to 28 volts through R1 and CR2, ($\tau \approx 3.3$ msec). Once C2 begins to charge, Q1, Q2, and Q4 begin to pass voltage to the +22 volt output. Recall that the d-c to d-c converter operates from this 22 volt output. The converter begins to run and couples a voltage via T1 back to the preregulator. It is retified by CR8-CR9, and again is applied to Capacitor C2. This voltage (+43 volts) backbiases CR2 and acts as Vcc for Q1, Q2, and Q3 as mentioned above. The full turn-on sequence requires about one second as illustrated below:

Typical Turn-On Current Surge

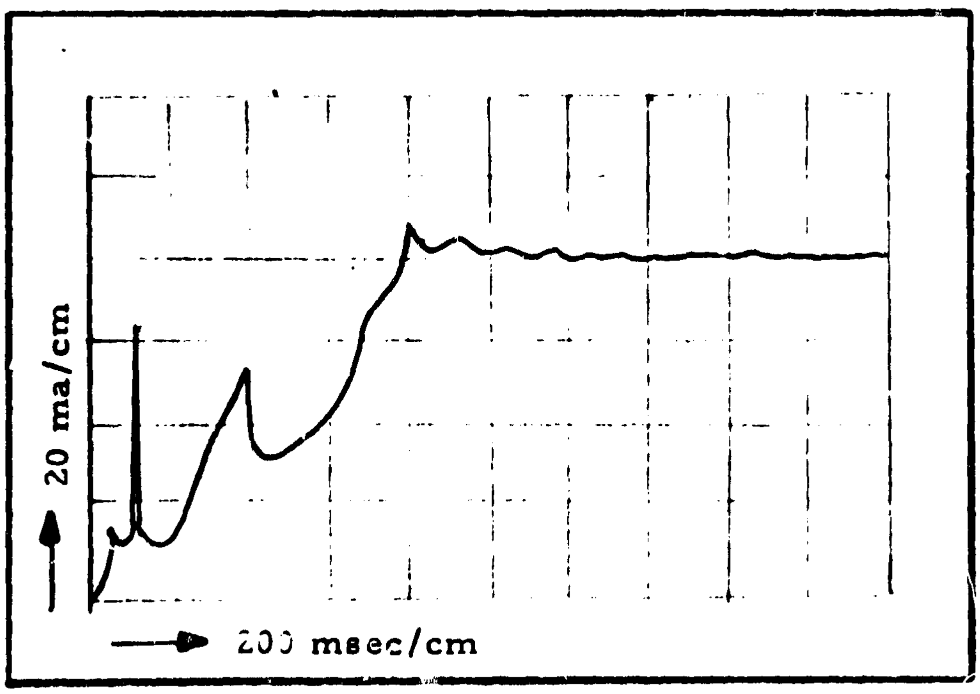

Note: Mainbody Electronics Only.

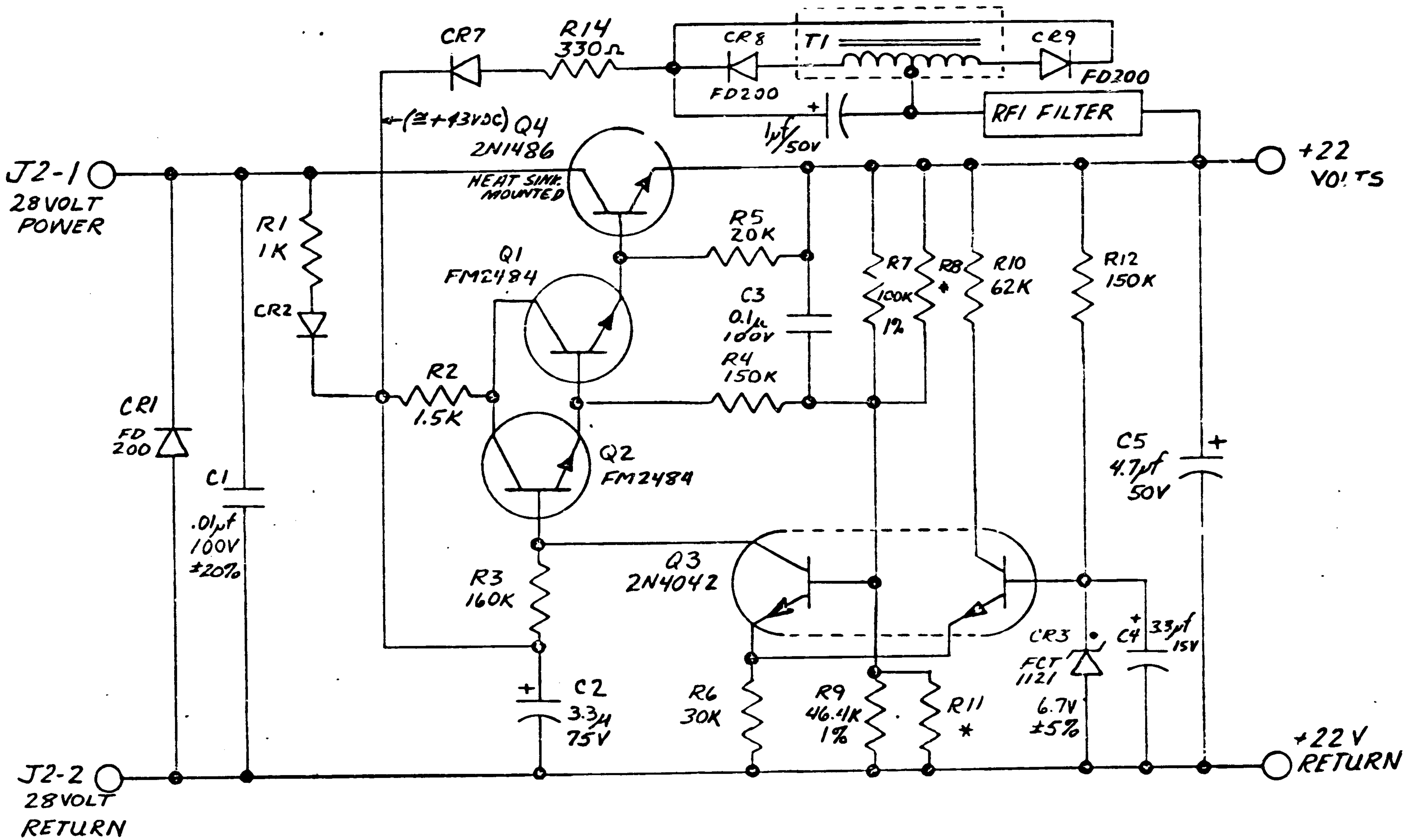

FIGURE 111

POWER SUPPLY PREREGULATOR SCHEMATIC DIAGRAM

215

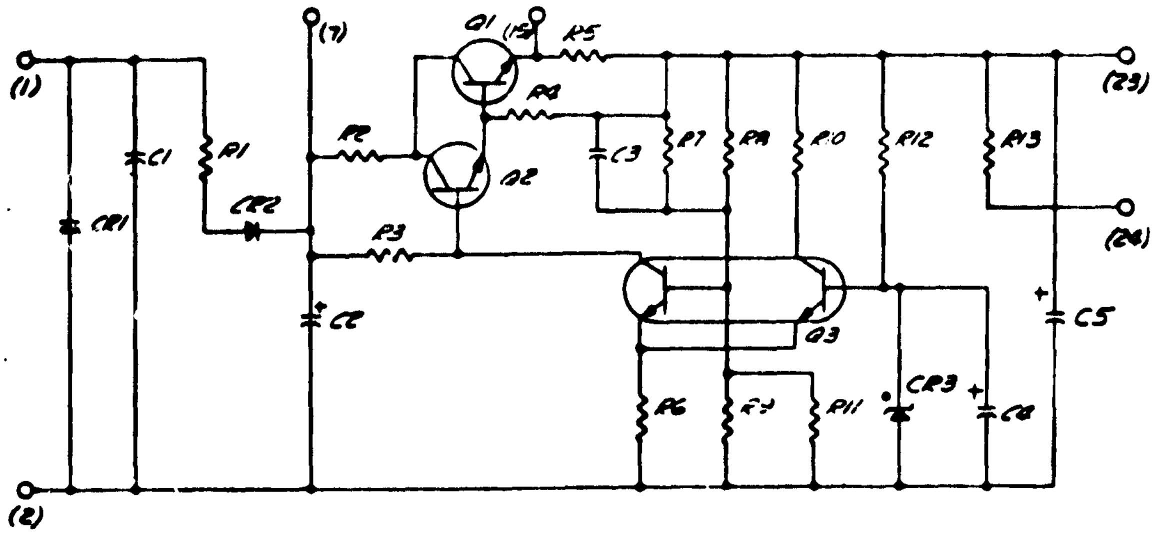

(Reference W4534)

R1 = 1K
R2 = 1.5K
R3 = 160K
R4 = R12 = 150K
R5 = 20K
R6 = 30K
R7 = 100K
R8, R11 = select
R9 = 46.4K
R10 = 62K
R13 = 10K

C1 = .01μf
C2 = C4 = 3.3 μf
C3 = 0.1 μf
C5 = 4.7 μf
Q' = Q2 = FM2484
Q3 = 2N4042

FIGURE 112

POWER SUPPLY PREREGULATOR MODULE SCHEMATIC DIAGRAM

5.21 Power Supply Post Regulators

There are five post regulators utilized within the power supply. Of these, two are +20 volts and the rest are -20 volts, +6 volts, and -6 volts, respectively.

The regulators provide regulation of the power provided by the converter and reduces noise and ripple on the output lines. The circuits are conventional series regulators with Zener reference diodes, and differential error detection amplifiers that sense voltage variations in the output lines. In each case transistors amplify the error signals which drive Darlington connected pass transistors. The circuit of each regulator is illustrated in Figures 113 thru 116.

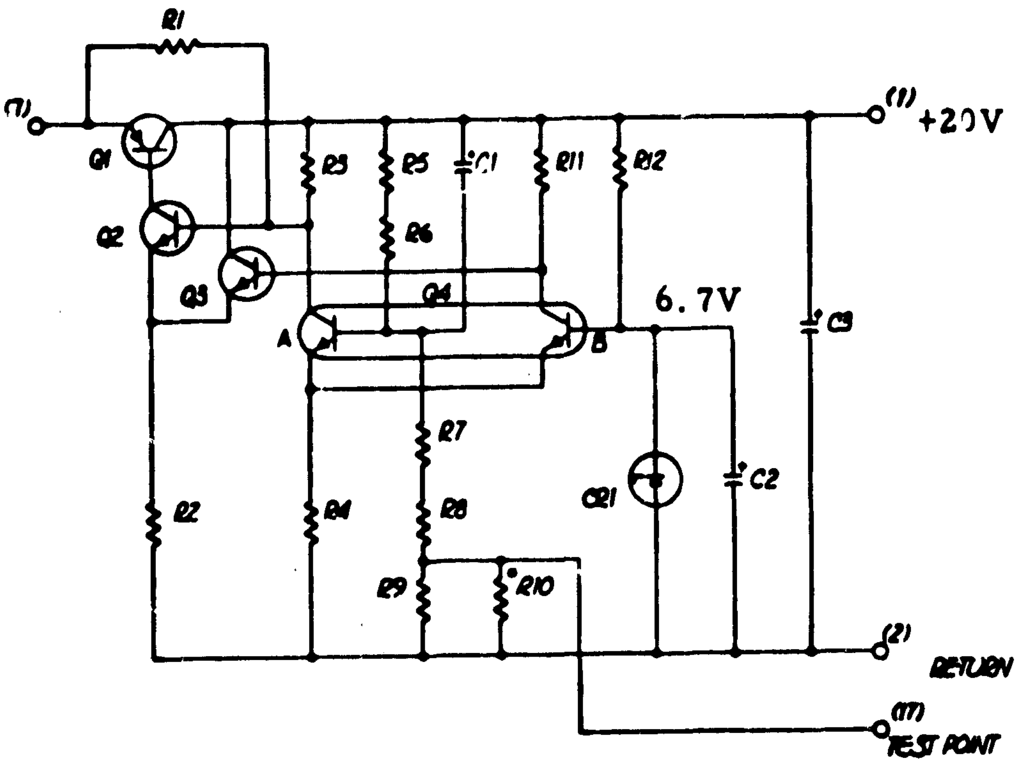

(Reference W4349)

R1 = 470K
R2 = 5.6K
R3 = R5 = 100K
R4 = 30K
R6 = R7 = 10 ohm
R8 = 48.7K
R9 = 5.62K
R10 = Select
R11 = 82K
R12 = 130K

C1 = 1µf
C2 = 3.3 µf
C3 = 4.7 µf
Q1 = ML20001
Q2 = Q3 = FM2484
Q4 = 2N4042
CR1 = FCT1121

FIGURE 113

+20 VOLT POWER SUPPLY POST REGULATOR
SCHEMATIC

218

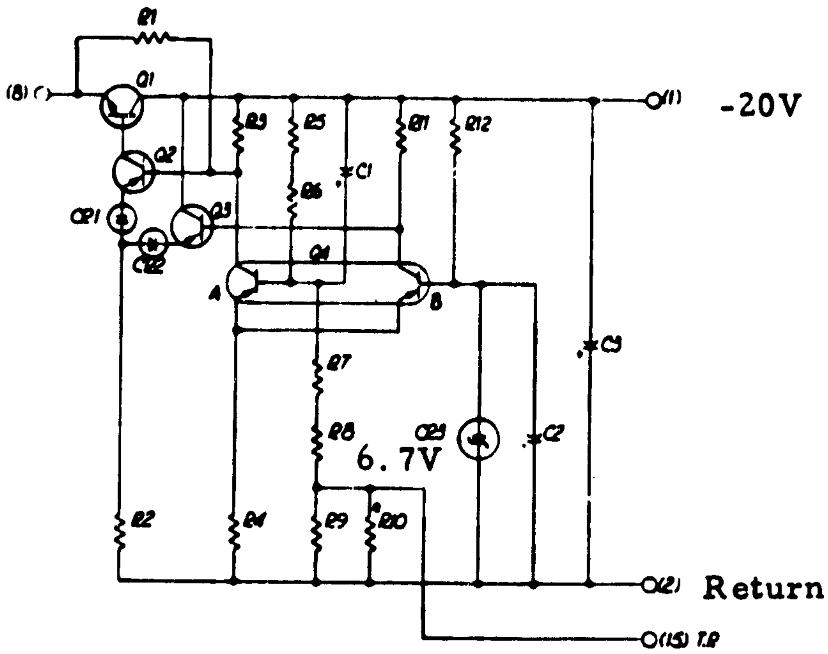

(Reference W4351)

R1 = 470K
R2 = 5.6K
R3 = R5 = 100K
R4 = 30K
R6 = R7 = 10 ohms
R8 = 48.7K
R9 = 5.62K
R10 = Select
R11 = 82K
R12 = 130K

C1 = 1μf
C2 = 3.3 μf
C3 = 4.7 μf
Q1 = FM3300
Q2 = Q3 = 2N2907A
Q4 = 2N4024
CR3 = FCT1121

FIGURE 114

-20 VOLT POWER SUPPLY POST REGULATOR
SCHEMATIC

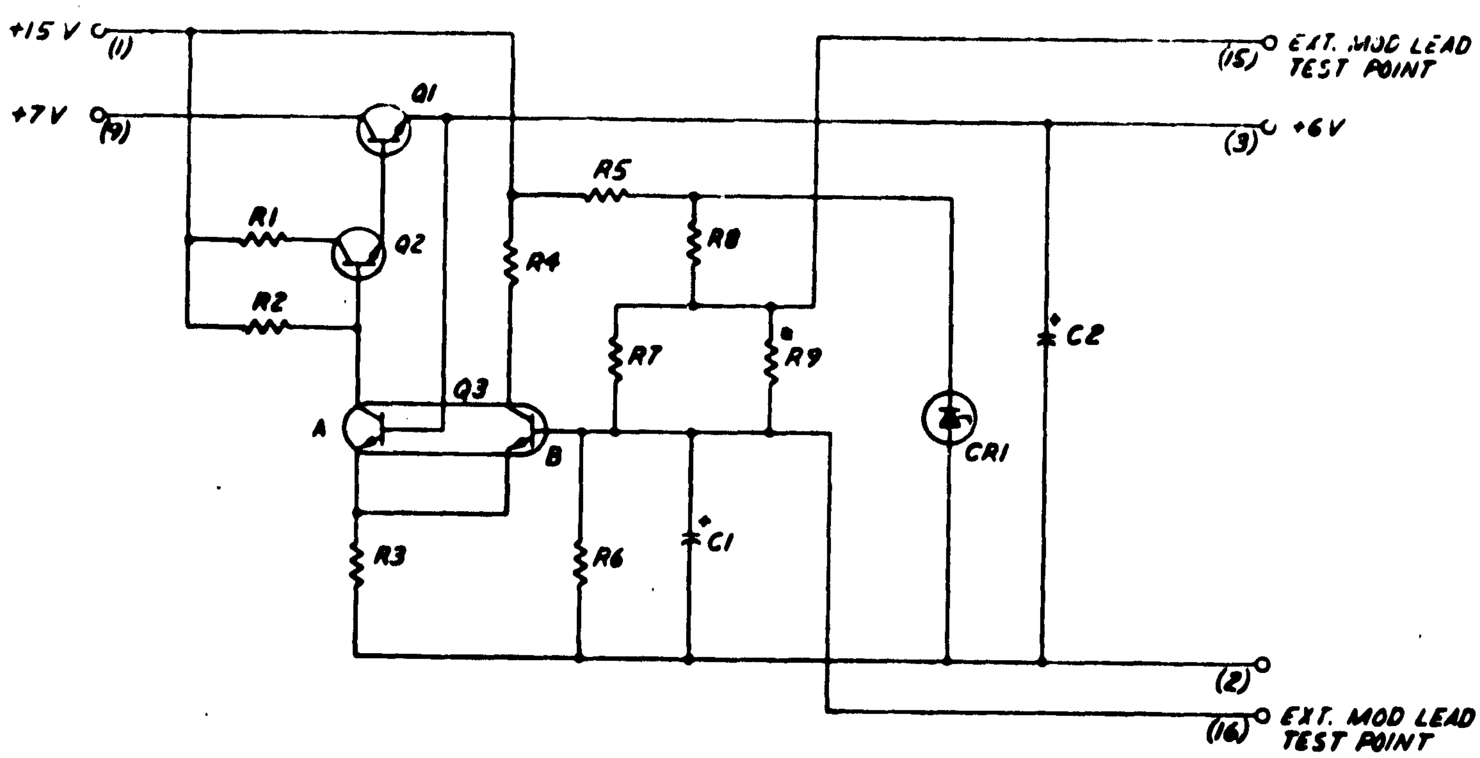

(Reference W4353)

R1 = 12K
R2 = 130K
R3 = 30.9K
R4 = 62K
R5 = 66.5K
R6 = 60.4K
R7 = 7.32K
R8 = 3.40K
R9 = Select

C1 = 1 µf
C2 = 22 µf
Q1 = FM3300
Q2 = FM2484
Q3 = 2N4042
CR1 = FCT1121

FIGURE 115

+6 VOLT POWER SUPPLY POST REGULATOR SCHEMATIC

220

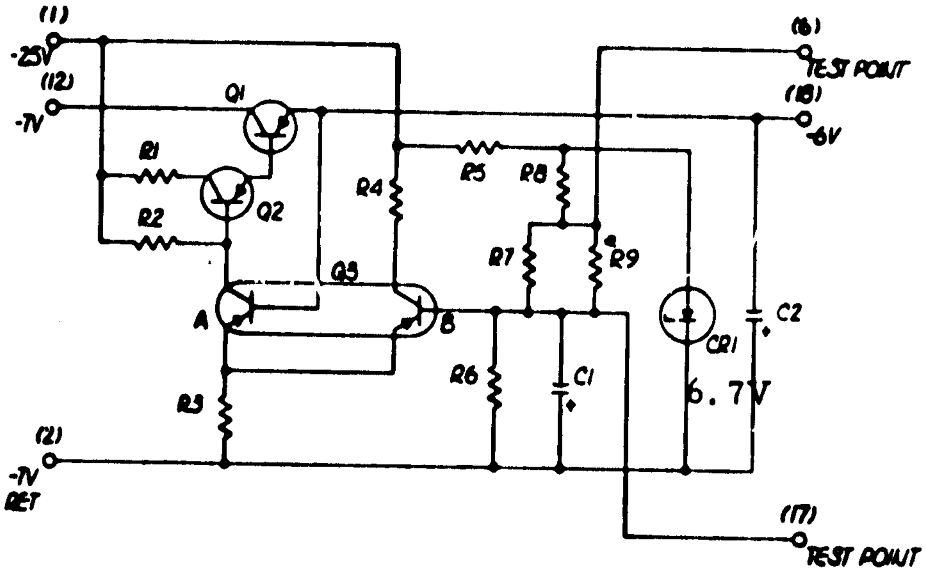

(Reference W4352)

R1 = 12K
R2 = 130K
R3 = 30.9K
R4 = 62K
R5 = 66.5K
R6 = 60.4K
R7 = 7.32K
R8 = 3.40K
R9 = Select

C1 = 1 μf
C2 = 22 μf
Q1 = Q2 = ML20001
Q3 = 2N4024
CR1 = FCT1121

FIGURE 116

-6 VOLT POWER SUPPLY POST REGULATOR SCHEMATIC

221

6.0 RECOMMENDATIONS AND IMPROVEMENTS

6.1 Search Coil Sensor

It is recommended that the shorting plug connector, J2-J3, be relocated such that the sensor will more easily slip into and out of its thermo blanket.

The repairability of the sensor would be greatly increased if the basic sensor housing was larger in cross section. Of course,this would have caused a slightly greater weight but this factor would have not been prohibitive.

The coil bobbin could have been made of nylon or possible molded plastic in order to achieve smooth side walls. This would have eased the winding of the coils.

Integrate the heating element resistors of the proportional heater into the preamplifier module to reduce the thermal resistance between the preamplifier and the heater.

6.2 400 Hz Notch Filter

C1 thru C4 and R1 thru R4 should have been purchased as ± 0.1% components in order to achieve a sharper notch at 400 Hz. See Figure 76, Page 123.

6.3 Fixed Gain and Gain Change Amplifier

Change the module test spec so that the gain measurements for the gain trim is made with DC input and output signals instead of AC signals. The measurement of AC signals, to better than 1%, is very difficult. Time was wasted in module test trying to make these AC measurements. The test set up should be as follows:

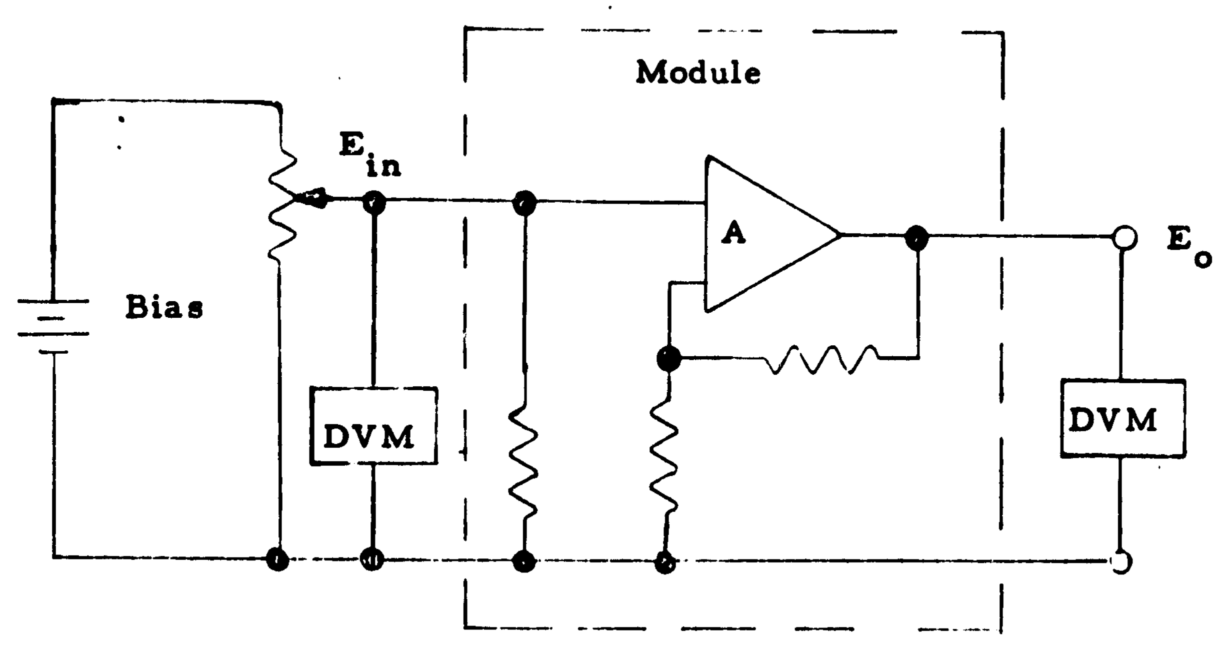

22r

When e_{Bias} is changed from ground to +2.5 volt, etc. the drive current into the base of Q2 should be checked for sufficient drive to turn Q2 (in the inverted mode) on HARD. I_{Base} should equal at least to I_c for inverted mode switching. See Figure 81, Page 136.

Note that I_{bQ2} = voltage at pin 3 minus the bias voltage at pin 12 divided by R17.

$$I_{bQ2} = \frac{V3 - V12}{R17}$$

Also note that R17 might have to be changed as the bias is changed and that the voltage for cut off of Q2 at pin 3 is negative for a bias of gnd at pin 12.

6.4 Bandpass Amplifiers

A. Noise at Output

CRl in Figure 87, Page 149, is a source of wideband noise. The following illustration shows the equivalent output stage:

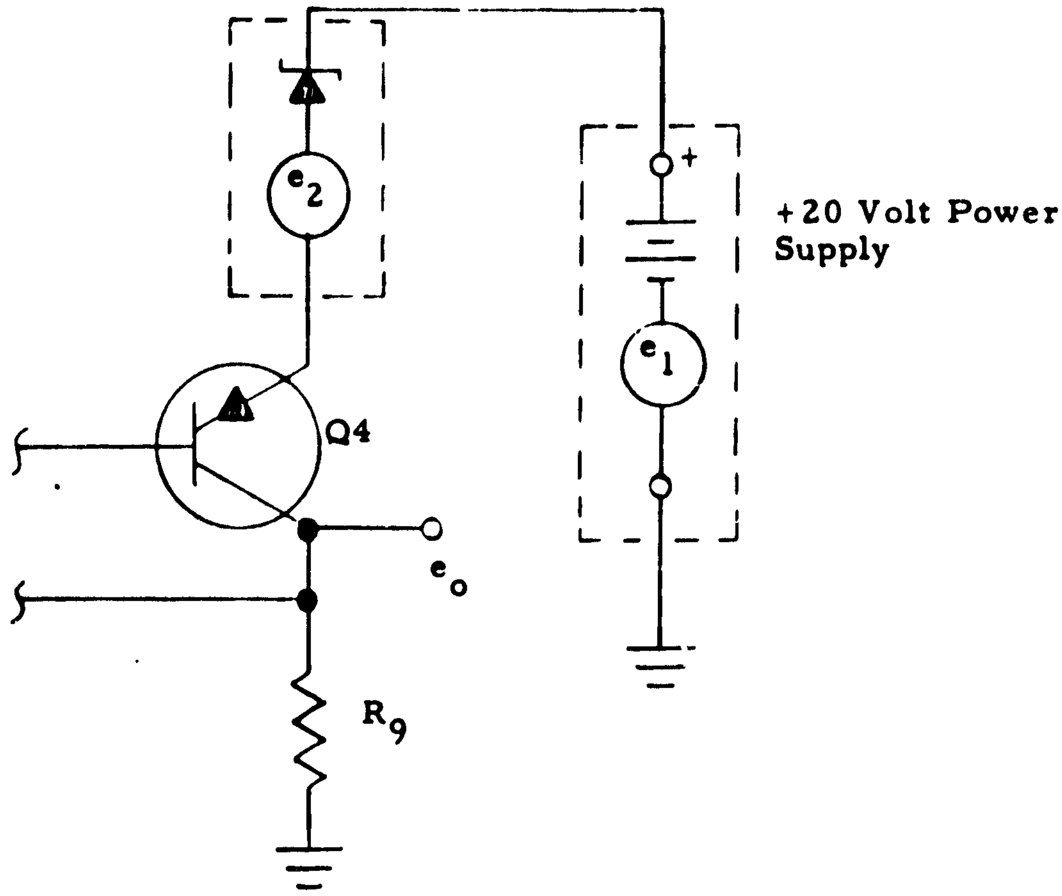

As shown e_1 is a noise source contained within the +20 volt power supply and e_2 is a noise source in the zenor diode CRl. The gain, to these noise sources, is quite high and they create noise voltages at e_o if the net gain around the amplifier feedback loop is less than unity at these noise frequencies. In production units considerable noise above 10 KHZ was found to be present at the output. To eliminate this problem it is recommended that an RC filter be added as shown:

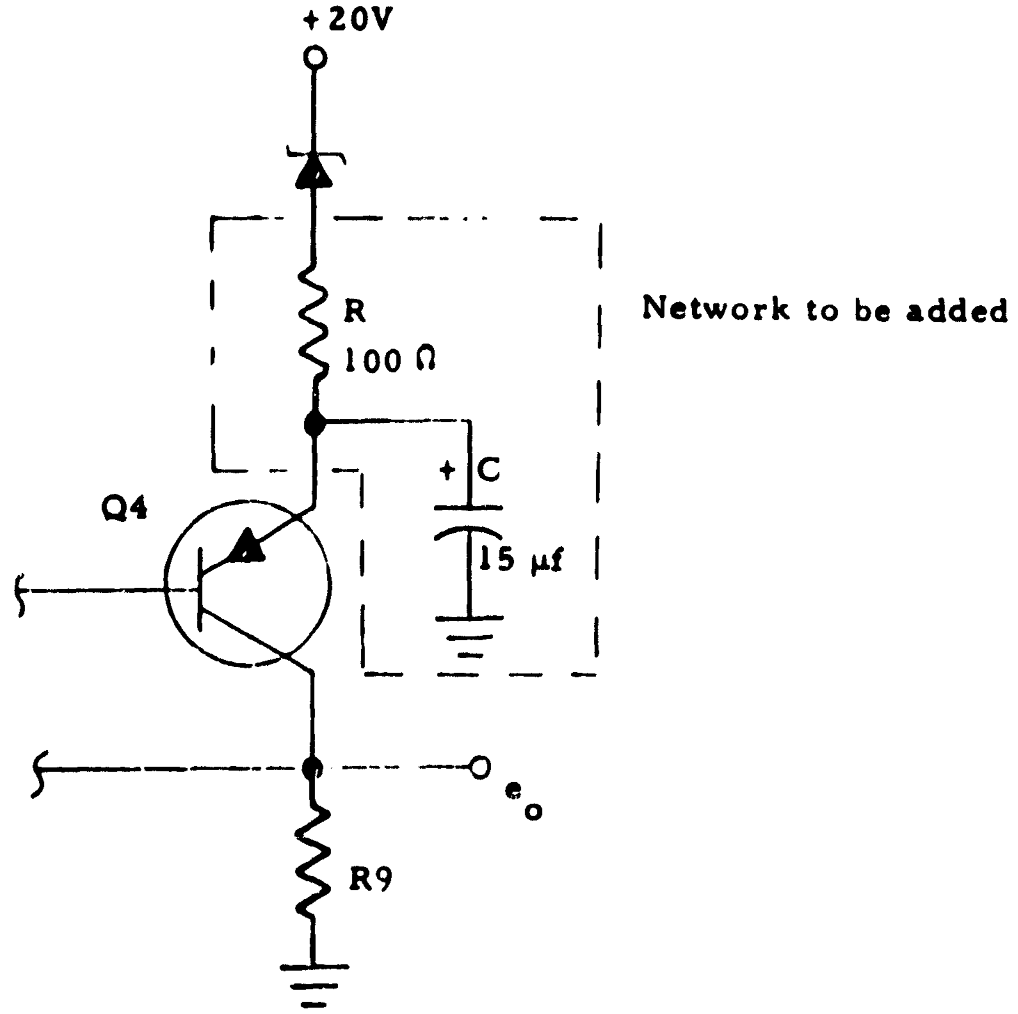

Inability to trim gain at f_o without also changing f_o's value. A trim resistor should be inserted between Q4 and R9 as shown:

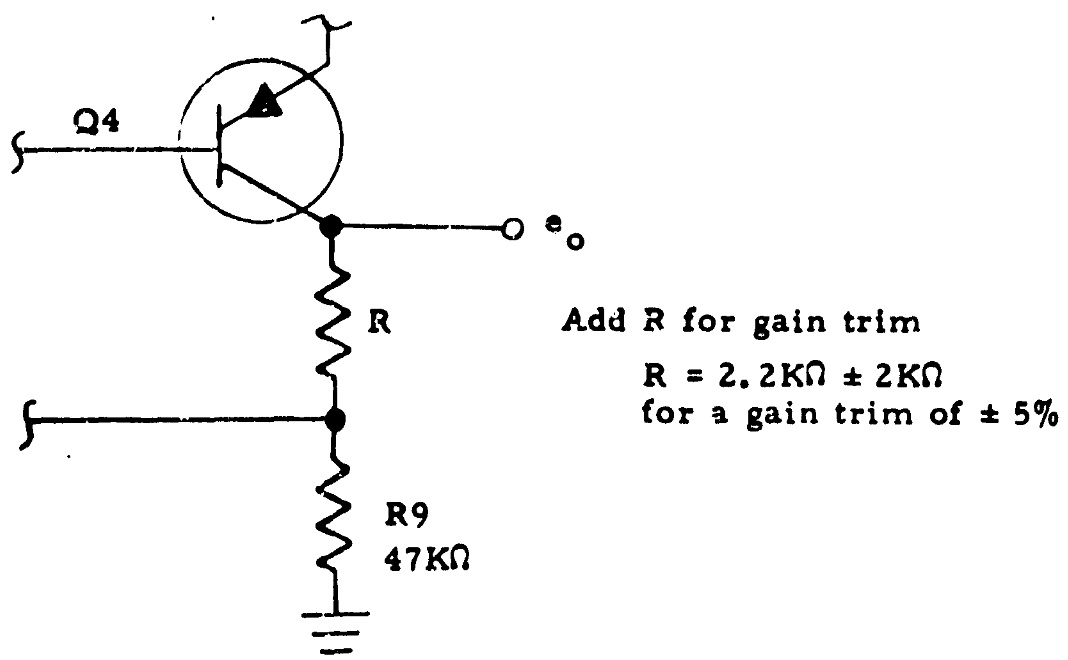

224

However R9 must be changed to a 1% resistor and R must also be a 1% resistor.

6.5 Subcarrier Oscillator (SCO)

It is recommended that a new circuit design be adopted for the current sources.

PROPOSED NEW SCO WITH HIGH STABILITY

Figure 117 shows the proposed new current sources I_1 and I_2. As shown, Q10-Q11 and Q14-Q15 are dual acting as differentail amplifiers. Point M and N are servoed by the amplifier to zero volts DC at all times. Thus I_1 and I_2 are determined only by R10, R11, and -20V. Notice that the changes in transconductance of Q12 and Q13 are so that Q11 and Q14 have at least 2 volts drain to source bias. The modulation input E_{in} circuitry functions similar to the present SCO. Test point P is brought out for DC calibration of modulation index. The switching transistor section of this proposed SCO can be identical or similar to the circuit for the present SCO. The V_{be} specification of a 2N2945 is 35V, thus a greater ΔV could be used but the gain band width of the transistor is lower. Of course, the anti-saturation diodes as previously described on Page 178 must be used.

A second solution for generation of the constant current source using less parts and afording a 22M Ω input impedance to the modulation signed is shown in Figure 118. Note that a search coil could be connected directly to the input.

6.6 IFC Frequency Components

It is recommended that the IFC signal be reconstructed using frequency components such that it will be more evenly distributed over frequency response of the instrument. Currently 40% of the IFC spectrum is centered about 100Hz with the remaining 60% distributed between 10 Hz and 1 KHz, according to the spectrum channel output. See Page 327.

6.7 Spectrum Channel Indexing

It would be desirable to add one spectrum channel to be used as an index or marker to the remaining seven channels. In the event that the spectrum channel status is ever lost, there is currently no way to know which spectrum channel the data represents.

235

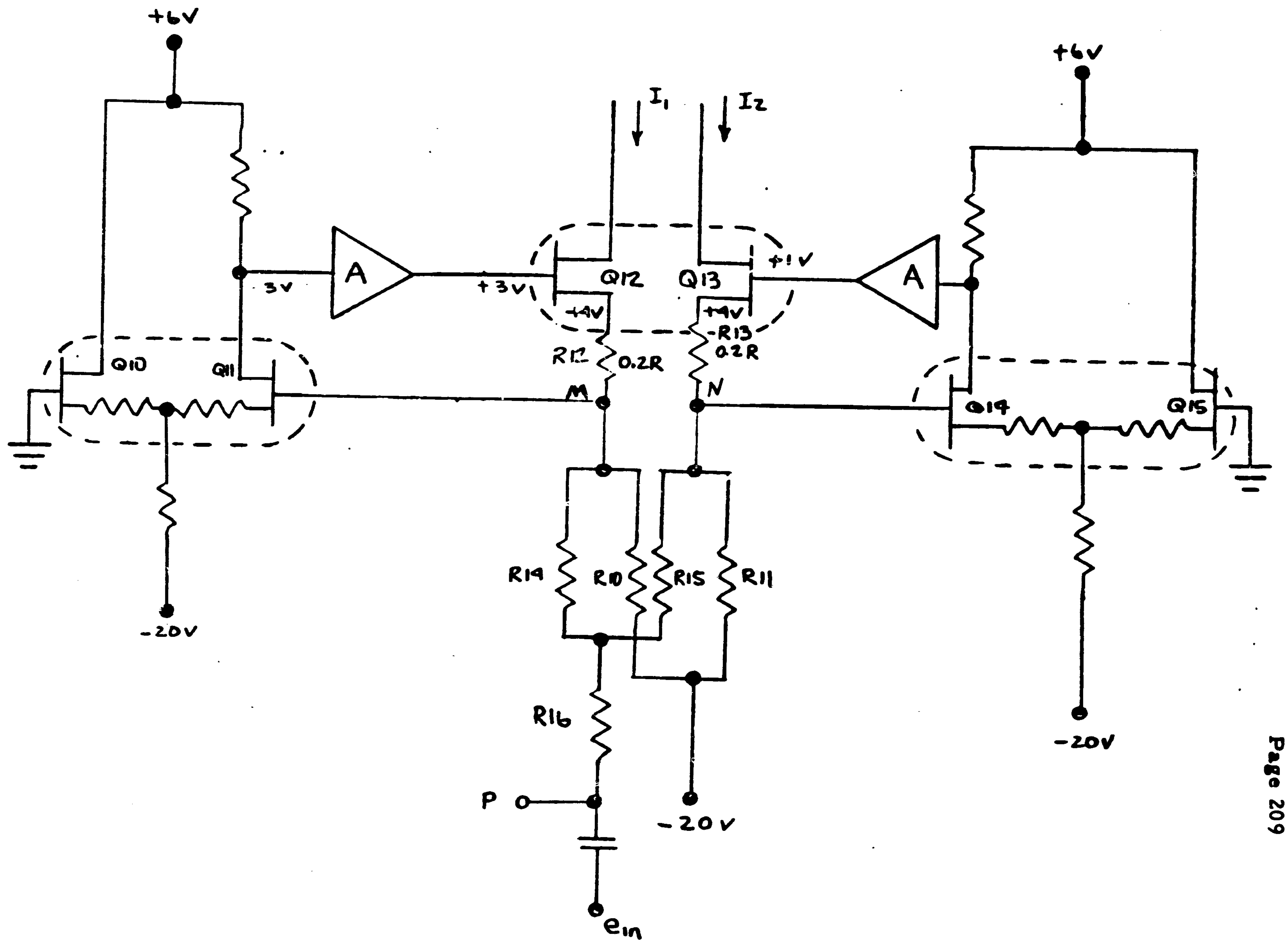

FIGURE 117

RECOMMENDED CURRENT SOURCE NO. 1 FOR SCO

226

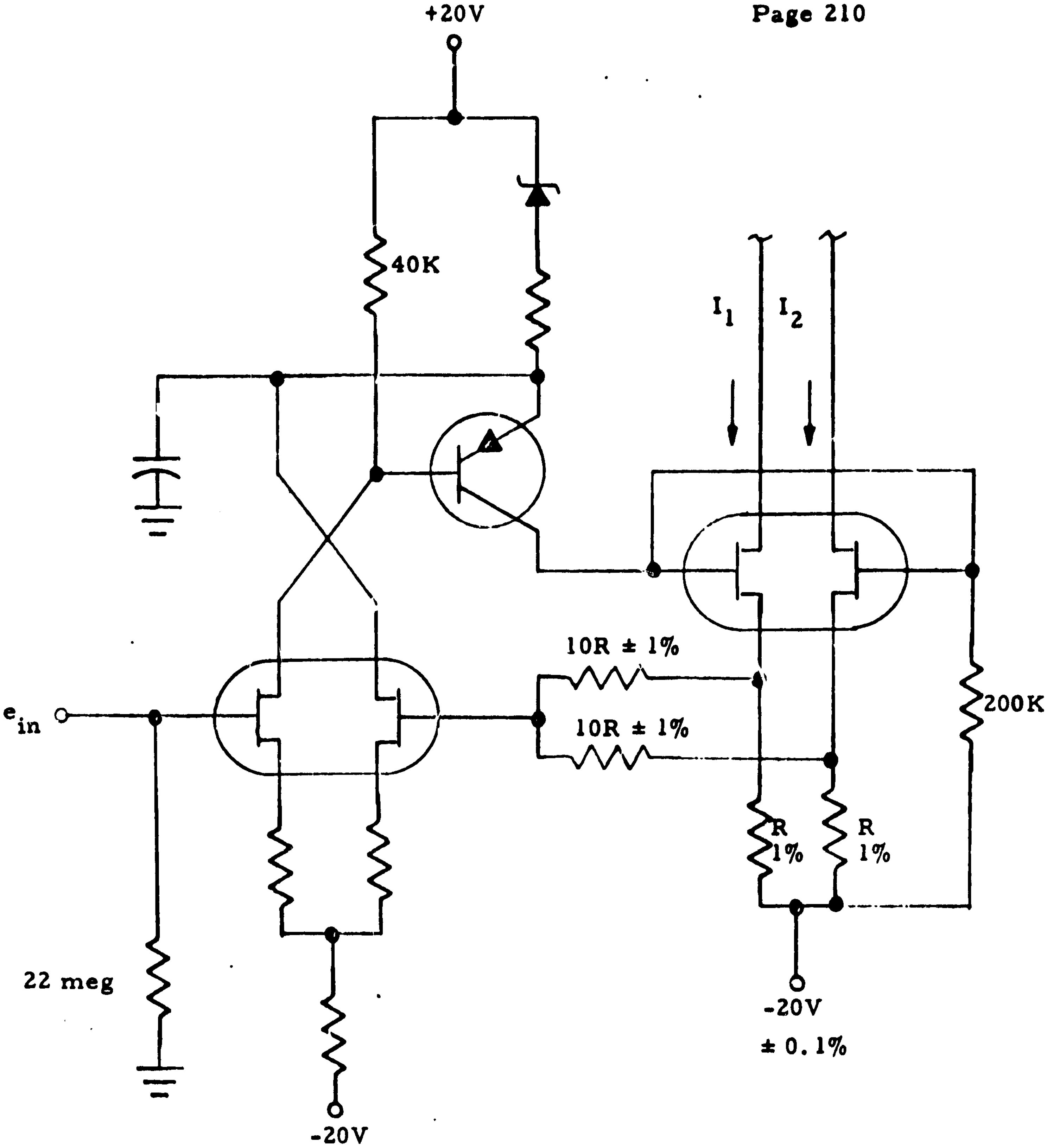

FIGURE 118
RECOMMENDED CURRENT SOURCE NO. 2 FOR SCO

227

7.0 SUMMARY

All of the Program's objectives were met. The instrument and sensors were designed, fabricated and successfully tested.

Despite highly compressed program schedules, the instrument, sensors, and BTE were considered to be outstanding in quality and performance. Only two MRB actions were required whereas numerous MRB's are typical to most programs. Noteworthy to mention is the fact that Marshall Laboratories' OGO-F Search Coil Magnetometer successfully passed all the Spacecraft Compliance and Environmental tests at TRW without difficulty.

Marshall Laboratories, however, experienced functional problems with delivered sensor-preamplifier assemblies, a discussion of this follows:

Sensor serial numbers 1, 2, and 3 were inspected successfully, tested, and delivered to JPL in May of 1967. Serial numbers 1 and 3 were returned to Marshall Laboratories on June 29, 1967 and July 5, 1967, respectively for failure analysis.

Initial testing at Marshall Laboratories had revealed no failures but subsequent testing disclosed an intermittant coil continuity. It was deemed advisable at this point to recall serial number 2. Upon recommendation of the coil manufacturer a thermal test of five cycles between -50°C and +70°C was performed. Tested were seven sensors (including the breadboard sensor), one core and coil assembly and two pairs of coils. This thermal testing revealed defective coils in serial numbers 1, 3, and 4. Serial number 2, unaffected by the problem, was returned to JPL. Serial numbers 5 and 6 were delivered in August along with the repaired numbers 1, 3, and 4.

APPENDIX A
MAINBODY ELECTRONICS
THEORETICAL FREQUENCY RESPONSE
WIDEBAND TEST POINT

OGOF22 14:37 LAI WED 8/30/67

OGO F 22 SEARCH COIL
MAINBODY ELECTRONICS
THEORETICAL FREQUENCY RESPONSE, WIDEBAND TEST POINT
INPUT = 25MV HIGH GAIN = 200

ROBERT J. NAHABIT

FREQUENCY	400 NOTCH	1850 L.P.	OVERALL GAIN	OUTPUT
.1	1	1	3.74986	9.37465 E-2
.2	1	1	14.2007	.355017
.5	1.	1.	64.6535	1.61634
1	1.	1.	131.289	3.28223
2	1.	1.	176.86	4.4215
5	.999997	1.	195.899	4.89748
10	.999989	1.00001	198.959	4.97399
20	.999956	1.00006	199.742	4.99354
50	.999715	1.00037	199.975	4.99937
100	.998745	1.00147	200.032	5.0008
200	.99223	1.00586	199.607	4.99017
300	.9517	1.01314	192.839	4.82098
350	.817936	1.01783	166.503	4.16257
390	.257382	1.02207	52.6122	1.31531
398	5.02505 E-2	1.02297	10.2809	.257023
399	2.36114 E-2	1.02308	4.83127	.120782
400	3.01106 E-3	1.0232	.61618	1.54045 E-2
401	2.95607 E-2	1.02331	6.04995	.151249
402	5.59823 E-2	1.02343	11.4587	.286468
410	.256814	1.02435	52.6134	1.31534
450	.783035	1.02923	161.184	4.02961
500	.922889	1.0359	191.203	4.78007
600	.975519	1.05097	205.048	5.1262
800	.992244	1.08642	215.599	5.38997
1000	.99602	1.12336	223.778	5.59446
1200	.997526	1.15021	229.473	5.73682
1500	.998548	1.13512	226.694	5.66735
1850	.999093	.996848	199.189	4.97972
2461	.999508	.646801	129.296	3.23241
3000	.999675	.432087	86.3893	2.15973
4000	.99982	.232957	46.583	1.16458
5000	.999886	.144821	28.9608	.72402
10000	.999972	3.45838 E-2	6.91656	.172914

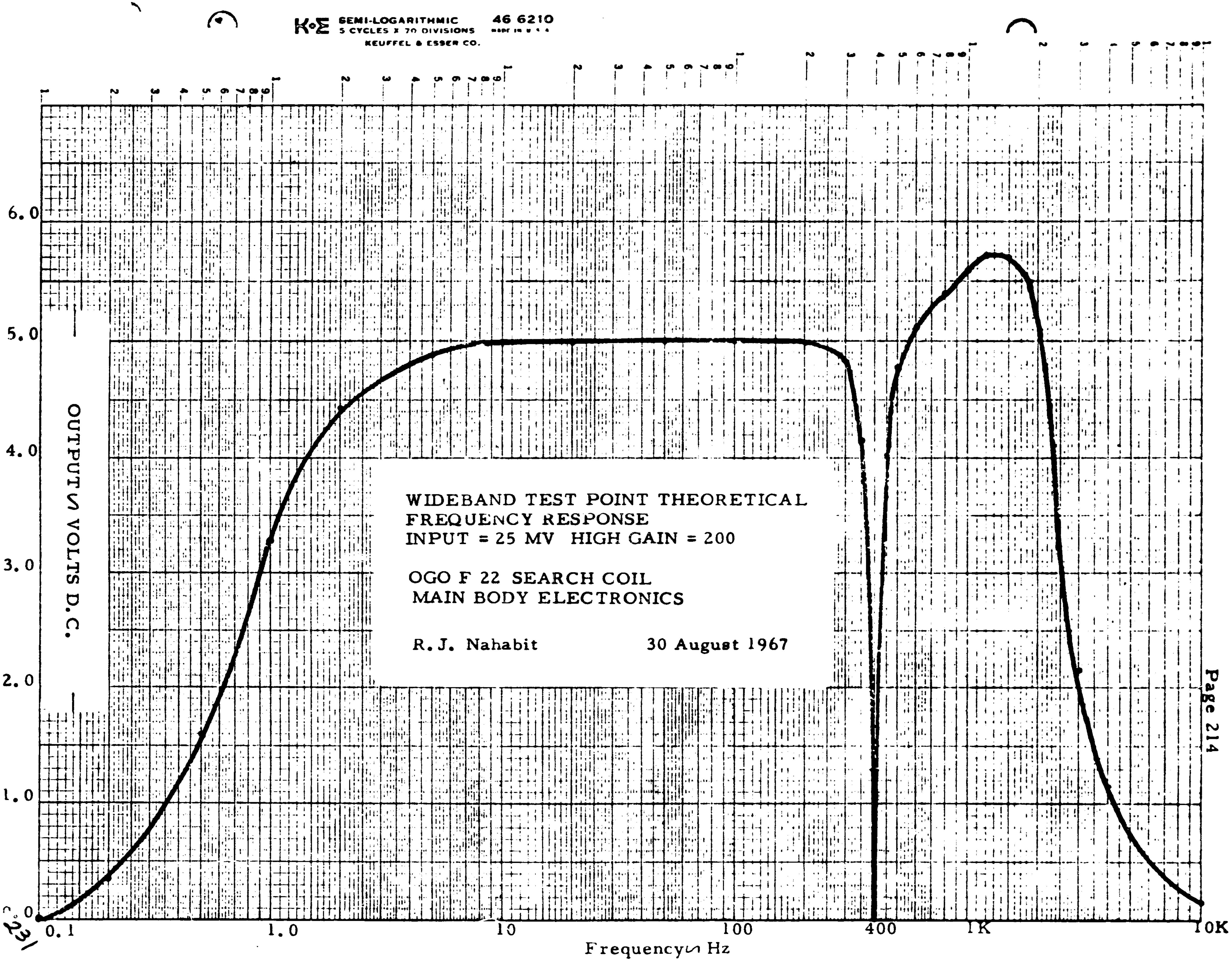

K&E SEMI-LOGARITHMIC 46 6210
5 CYCLES X 70 DIVISIONS
KEUFFEL & ESSER CO.
WIDEBAND TEST POINT THEORETICAL
FREQUENCY RESPONSE
INPUT = 25 MV HIGH GAIN = 200
OGO F 22 SEARCH COIL
MAIN BODY ELECTRONICS
R. J. Nahabit
30 August 1967
OUTPUT ∿ VOLTS D.C.
6.0
5.0
4.0
3.0
2.0
1.0
0.0
0.1
1.0
10
100
400
1K
10K
Frequency ∿ Hz

231

APPENDIX B
SENSOR - PREAMPLIFIER NOISE ANALYSIS

SENSOR - PREAMPLIFIER NOISE ANALYSIS

RO 68-164

I. Assumed equivalent circuits of probe and preamplifier

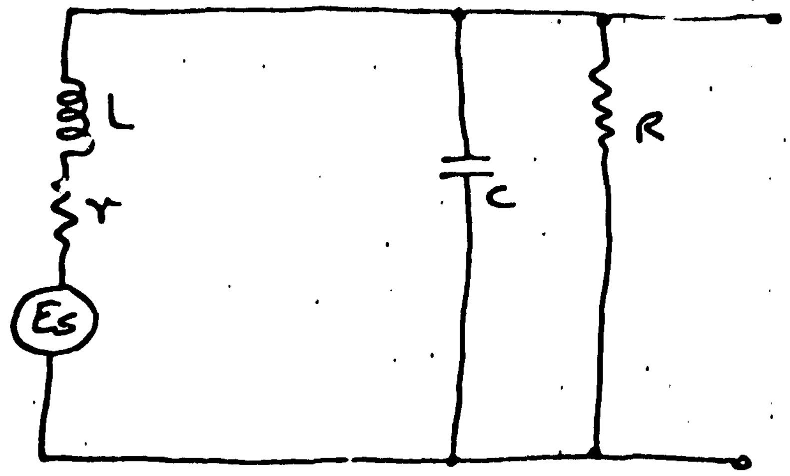

Fig 1. Assumed Probe Equivalent Circuit.

where

Es is the induced Lenz's Voltage
L is inductance
r is winding resistance
R is damping resistance
C is the combined capacitor of the distributed winding capacity, cable capacity, and pre'amp input capacity.

over →

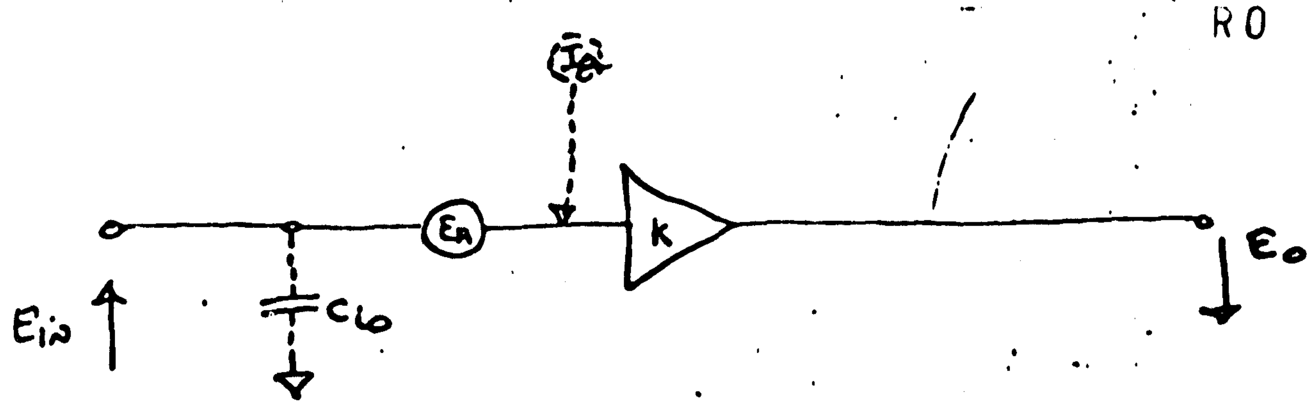

Fig 2. Assumed Amplifier Equivalent Circuit.

where

E_{in} is the input voltage
K is the voltage gain
C_{io} is the input Capacity (has been included in probe capacitance)
E_A is the Voltage noise source
I_A is the current noise source

I. <u>Signal Performance of Probe/Preamplifier</u>

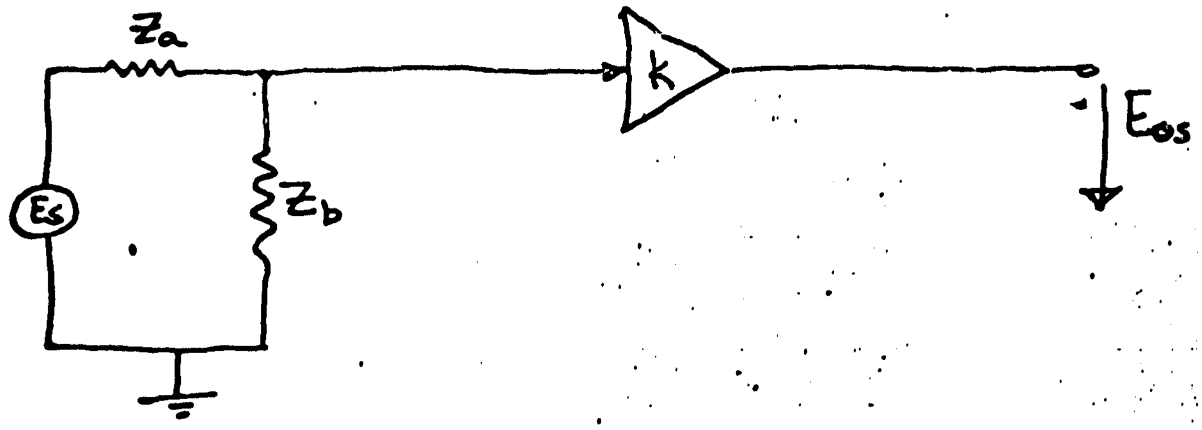

Fig 3. Model Used for Analyzing Output Due to Input Signal.

where

E_{os} is the output Voltage

E_s is the input signal Voltage (Lenz's) spectral Density Function.

K is the Voltage gain

Z_a is series impedance of the sensor

$$Z_a = r + sL$$

Z_b is the shunt impedance of the sensor

$$Z_b = \frac{R\left(\frac{1}{sC}\right)}{R + \frac{1}{sC}} = \frac{R}{1 + sRC}$$

$$E_{os} = \left[\frac{Z_b}{Z_a + Z_b}\right] K E_s$$

Let

$$\frac{1}{H} = \frac{Z_b}{Z_a + Z_b} \; ; \quad \& \quad Z_c = \frac{Z_a Z_b}{Z_a + Z_b}$$

therefore

$$E_{os} = \frac{K E_s}{H}$$

$$E_{os} = K E_s \left[\frac{Z_b}{Z_a + Z_b}\right]$$

$$= K E_s \left[\frac{1}{Z_a/Z_b + 1}\right]$$

$$= K E_s \left[\frac{1}{(r + sL)\left(\frac{1 + sRC}{R}\right) + 1}\right]$$

$$= K E_s \left[\frac{1}{s^2 LC \cdot \left(\frac{R}{r+R}\right) + s\left(rC + \frac{L}{R}\right) + 1}\right]$$

or $E_{os} = KE_s \left[\dfrac{1}{s^2/\omega_n^2 + \dfrac{2\eta s}{\omega_n} + 1} \right] = \dfrac{KE_s}{H(s)}$

where

$$\omega_n^2 = \left(\frac{r+R}{R} \right) \cdot \frac{1}{LC}$$

and

$$\eta = \frac{1}{2}\left(\frac{1}{R}\sqrt{\frac{L}{C}} + r\sqrt{\frac{C}{L}} \right)\left(\sqrt{\frac{R}{r+R}} \right)$$

III. Output Due To THERMAL (JOHNSON) NOISE Alone

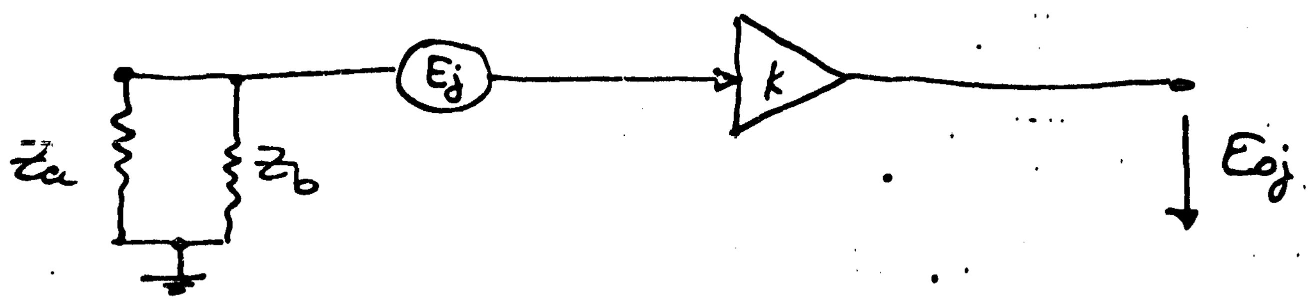

Fig 4. Model Used for Analyzing Output Due to Johnson Noise.

$$E_j^2 = 4kT\,Re\left\{ \frac{(Z_a)(Z_b)}{Z_a + Z_b} \right\} = 4kT\,Re\{Z_c\}$$

$$E_{oj}^2 = K^2 4kT\,Re\{Z_c\}$$

(b) Output Due To Amplifier Voltage Noise Alone

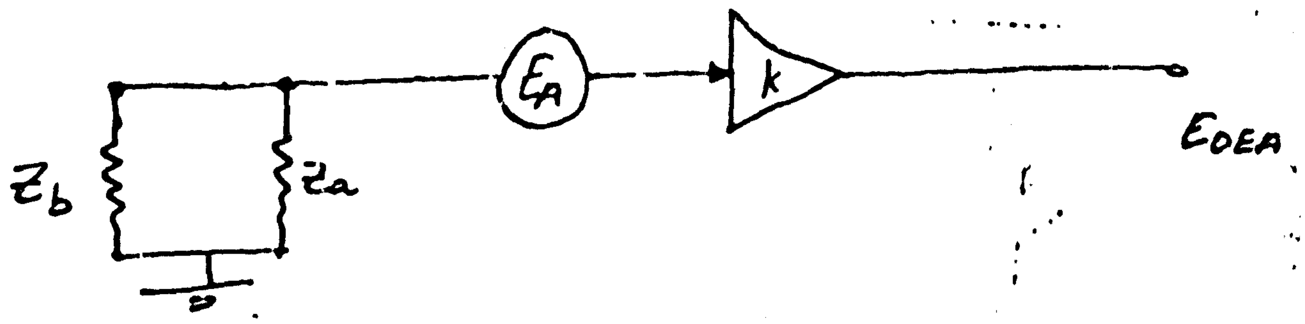

Fig 5. Model Used for Analyzing Output Due To Amplifier Voltage Noise.

where

E_A is the amplifier voltage noise spectral density

and $E_{OEA} = K E_A$

(c) Output due to Amplifier Current Noise Alone

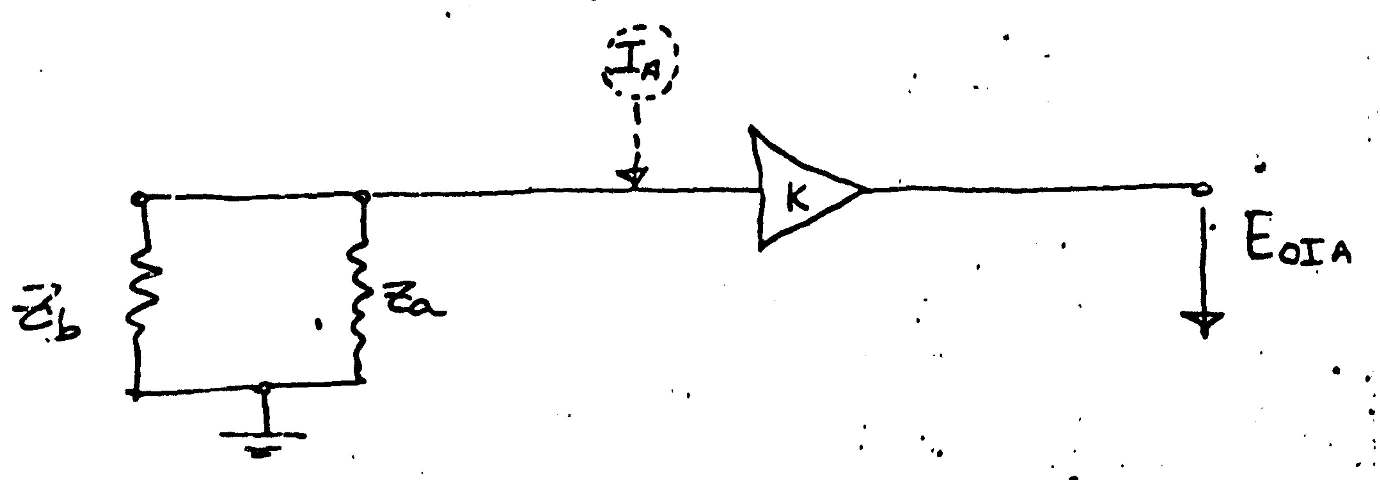

Fig 6: Model Used for Analyzing Output To Amplifier Current noise.

Over -

I_A is the amplifier current noise spectral density.

$$E_{UIA} = \left(\frac{Z_a Z_b}{Z_a + Z_b}\right) K I_A$$

$$E_{OIA} = Z_c K I_A$$

Noise Power Due TO CORRELATED
fier Voltage & Current Noise

e amplifier voltage and current noise
ces are not statistically independant. Their
relation is generally greater than 0.9.
ity Correlation is assumed as:

$$\gamma \equiv \frac{\overline{E_A \cdot I_A}}{E_A + I_A} = 1$$

The total amplifier output noise power due to
e voltage and current noise generator is:

$$E_{OA}^2 = |E_O E_A + E_{OIA}|^2$$

$$E_{OA}^2 = |E_{OEA}|^2 + |E_{OIA}|^2 + 2\left[Re\{E_{OEA} \cdot E_{OIA}\} + Im\{E_{OEA} \cdot E_{OIA}\}\right]$$

Since E_{OEA} is real

$$Im\{E_{OEA} \cdot E_{OIA}\} = 0$$

Therefore

$$E_{0N}^2 = |E_{OEA}|^2 + |E_{OIA}|^2 + 2 Re\, E_{OEA} \cdot E_{OIA}$$

or $$E_{OA}^2 = |E_{OEA}|^2 + |E_{OIA}|^2 + 2 E_{OEA} Re\{E_{OIA}\}$$

TOTAL OUTPUT NOISE

The thermal noise of the sensor is statistically independant of the amplifier noise. The total system output noise is the sum of two noise powers.

$$E_{ON}^2 = |E_{OEA}|^2 + |E_{OIA}|^2 + 2E_0 E_A I_a Re\{E_0 I_A\} + 4kTRe\{Z_c\}$$

or $$E_{ON}^2 = K^2\left[E_a^2 + I_a^2 (Z_c)^2 + (2E_aI_a + 4kT) Re\{Z_c\}\right]$$

$$Z_c = \frac{(r+sL)\cdot\frac{R}{1+sRC}}{r+sL+\frac{R}{1+sRC}}$$

or $$Z_c = \frac{r + sL}{H}$$

$$|Z_c|^2 = \frac{r^2 + (\omega L)^2}{|H|^2}$$

Therefore $$Re\{Z_c\} = Re\left\{\frac{r+sL}{H}\right\}$$

or $$Re\{Z_c\} = Re\left\{\frac{(r+sL)H^*}{|H|^2}\right\}$$

$$Re\{Z_c\}\frac{1}{|H|^2} = \frac{1}{|H|^2}\left[r\,Re\{H^*\} - L\,Im\{H^*\}\right]$$

$$Re\{Z_c\} = \frac{1}{|H|^2}\left[r\left(\frac{r+R}{R} - \omega^2 LC\right) + \omega^2 L\left(\frac{L}{R} + rC\right)\right]$$

$$Re\{Z_c\} = \frac{1}{|H|^2}\left[r\left(\frac{r+R}{R}\right) - \omega^2 LCr + \frac{\omega^2 L^2}{R} + \omega^2 LCr\right]$$

$$Re\{Z_c\} = \frac{1}{|H|^2}\left[r\left(\frac{r+R}{R}\right) + \frac{\omega^2 L^2}{R}\right]$$

$$Re\{Z_c\} = \frac{1}{|H|^2}\frac{1}{R}\left[r(r+R) + \omega^2 L^2\right]$$

For $0.1 \le \eta \le 1$

$R \gg r$

$\eta \simeq \frac{1}{2}\frac{\omega_n L}{R}$

$\therefore R = \frac{\omega_n L}{2\eta}$

$$Re\{Z_c\} = \frac{1}{|H|^2}\left[r + \left(\frac{\omega}{\omega_n}\right) 2\eta L\omega\right]$$

over → 240

$$Re\{Z_c\} = \frac{r}{|H|^2}\left[1 + \left(\frac{\omega}{\omega_n}\right)\frac{2mL\omega}{r}\right]$$

$$E_{ON}^2 = K^2\left[E_a^2 + I_a^2\left(\frac{r^2 + \omega^2L^2}{|H|^2}\right) + (2E_aI_a + 4kT)\,r\left(\frac{1 + \frac{\omega}{\omega_n}\cdot\frac{2mL\omega}{r}}{|H|^2}\right)\right]$$

The signal output power is:

$$E_{OS}^2 = \frac{K^2 E_s^2}{|H|^2}$$

The overall output signal to noise ratio (SNR is :-

$$\frac{S_o}{N_o} = \frac{E_{OS}^2}{E_{ON}^2}$$

$$\frac{S_o}{N_o} = \frac{K^2E_s^2/|H|^2}{K^2\left[E_a^2 + I_a^2\left(\frac{r^2+\omega^2L^2}{|H|^2}\right) + (2E_aI_a + 4kT)\,r\left[\frac{1 + \omega/\omega_n\,\frac{2mL\omega}{r}}{|H|^2}\right]\right]}$$

$$= \frac{m^2}{E_a^2|H|^2 + I_a r^2\left(1 + \frac{\omega^2L^2}{r^2}\right) + (2E_aI_a + 4kT)\,r\left[1 + \frac{\omega}{\omega_n}\,\frac{2mL\omega}{r}\right]}$$

 (10)

SPOT NOISE (Transistor noise values from manufacturer's spec sheets)

RO 68-164

1 Hz

$E^{*}_{OEA} = 1.5 \times 10^{-7}\ V/\sqrt{Hz}$

$E_{oj}^{2} = 8 \times 10^{-16}\ V^2/Hz$

$E_{ON} = 1.5 \times 10^{-7}\ V/\sqrt{Hz}$

---

10 Hz.

$E_{OEA} = 5 \times 10^{-8}\ V/\sqrt{Hz}$

$E_{oj}^{2} = 8 \times 10^{-16}\ V^2/Hz$

$E_{ON} = 5.7 \times 10^{-8}\ V/\sqrt{Hz}$

---

30 Hz

$E_{OEA} = 3 \times 10^{-8}\ V/\sqrt{Hz}$

$E_{oj}^{2} = 8 \times 10^{-16}\ V^2/Hz$

$E_{ON} = 4.1 \times 10^{-8}\ V/\sqrt{Hz}$

---

100 Hz

$E_{OEA} = 2.2 \times 10^{-8}\ V/\sqrt{Hz}$

$E_{oj}^{2} = 22 \times 10^{-16}\ V^2/Hz$

$E_{OIA}^{2} = 8.7 \times 10^{-19}\ V^2/Hz$

$E_{ON} = 5.2 \times 10^{-8}\ V/\sqrt{Hz}$

(41)

RO 68-164

600 Hz

$E_{oEA} = 1.1 \times 10^{-8}\ V/\sqrt{Hz}$

$E_{oj}^2 = 520 \times 10^{-16}\ V^2/Hz$

$E_{oIA} = .88 \times 10^{-16}\ V^2/Hz$

$E_{ov} = 2.3 \times 10^{-7}\ V/\sqrt{Hz}$

---

1 KHz

$E_{oEA} = 1 \times 10^{-8}\ V/\sqrt{Hz}$

$E_{oj}^2 = 720 \times 10^{-16}\ V^2/Hz$

$E_{oIA} = 1.8 \times 10^{-16}\ V^2/Hz$

$E_{ov} = 2.65 \times 10^{-7}\ V/\sqrt{Hz}$

APPENDIX C
MASTER DRAWING LISTS

244

APPLICATION		PARTS DISPOSITION	DWG. NO.	REV
NEXT ASSY	FINAL ASSY	1. USE 3. CANNOT BE REWORKED 2. REWORK 4. RECORD 5.	MDL 708100-101	

REVISIONS

DISP	EFF	REV	DESCRIPTION	BY	CK	DATE	APPD

SHEET INDEX	REV									
	SHEET	1	2	3	4	5	6	7	8	9

INTERPRET THIS DRAWING PER STANDARDS IN MIL-D-70327

DIMENSIONS ARE IN INCHES
TOLERANCES ON

DECIMALS: .X ± .1; .XX ± .03; .XXX ± .010; .XXXX ± .0050
ANGLES ± 0° 30'

✓ SURFACE ROUGHNESS

HOLE DIA.	TOLERANCE
.0135 THRU .125	+ .004 - .001
.126 THRU .250	+ .005 - .001
.251 THRU .500	+ .006 - .001
.501 THRU .750	+ .008 - .001
.751 THRU 1.000	+ .010 - .001

CONTRACT NO. JPL No 951630

DRAWN P. Goldin 9 Aug 67

CHECK

MECH ENGR

ELECT ENGR [signature] 23 Aug 67

PROJ MGR [signature] 23 Aug 67

APPD

DESIGN ACTIVITY APPD

M L MARSHALL LABORATORIES
TORRANCE, CALIFORNIA

TITLE MAINBODY ELECT. ASSY - TRIAX. SEARCH COIL MAGN. OGO-F-22

SIZE A | CODE IDENT NO. 13126 | DWG NO. MDL 708100-101 | REV

245

LINE NO.	ASSEMBLY POSITION 1	2	3	4	5	6	7	8	9	QTY	DRAWING NUMBER	REV LTR	DRAWING TITLE RO 68-164	DWG SIZE
1	X										708100-101	A	MAINBODY ELECTRONICS ASSY	E
2		X								REF	S46765	A	TEST SPEC.	A
3		X								REF	708000	E	WIRING INTERFACE DIAGRAM	F
4		X								REF	708001	C	EXPER. INTERFACE CABLING INFO	A
5		X								REF	708002	A	ENVELOPE - MAINBODY ELECT.	D
6		X								REF	708004	B	THERMAL DIAGRAM	C
7		X								REF	708006	N/C	FUNCTIONAL BLOCK DIAGRAM	E
8		X								REF	708007	N/C	DRILL PLATE - ELECT. UNIT	C
9		X								REF	708008	N/C	LAYOUT	E
10		X								REF	708009	N/C	SURFACE FINISH - ELECT. UNIT	E
11														
12														
13														
14		X								1	708111-101	N/C	POWER SUPPLY & LOGIC ASSY	E
15			X							1	708111-1	N/C	MATRIX SUB-ASSY (PWR. SUP)	E
16				X						1	T708112-101	N/C	HOOKUP & POSITIONING BOARD	A/W
17					X					1	T708112-1	N/C	HOOKUP BOARD	A/W
18					X					1	T708112-2	N/C	POSITIONING BOARD	A/W
19														
20														
21														
22				X						1	T708113-101	N/C	MATRIX (PWR. SUPPLY)	A/W
23					X					1	T708113-1	N/C	WAFER	A/W
24														
25					X					REF	SP30253-17	G	JIG, WAFER	D
26														
27				X						2	T708117-2	N/C	SPACER	A/W
28														
29				X						1	W4890X2	A	MODULE - SYNC AMPL.	A
30					X					REF	W4890	N/C	" " "	D
31					X					REF	S46741		TEST SPEC.	
32														
33				X						1	W4347X2	B	MODULE - CHOPPER	A
34					X					REF	W4347	A	" "	E
35					X					REF	S46744		TEST SPEC.	
36														
37				X						1	W4520X1	A	MODULE - RECTIFIER FILTER	A
38					X					REF	W4520	N/C	" " "	E
39					X					REF	S46664	A	TEST SPEC.	A
40														
41				X						1	W4520X2	A	MODULE - RECTIFIER FILTER	A
42					X					REF	W4520	N/C	" " "	E
43					X					REF	S46664	A	TEST SPEC.	A
44														
45				X						1	W4533X1	N/C	MODULE - RECTIFIER FILTER	A
46					X					REF	W4533	N/C	" " "	D
47					X					REF	S46711	N/C	TEST SPEC.	A
48				X						1	W4534X1	A	MODULE - PRE-REGULATOR	A
49					X					REF	W4534	N/C	" " "	E
50					X					REF	S46712	A	TEST SPEC.	A

MODEL NO. ML 337-1

TITLE—	SIZE	CODE IDENT NO.	DWG NO.	REV
MASTER DRAWING LIST MAINBODY ELECT. ASSY - TRIAXIAL SEARCH COIL MAGN. - OGO-F-22	A	13126	MDL 708100-101	
	SCALE	RELEASED	SHEET 2 OF 2	

LINE NO.	ASSEMBLY POSITION 1	2	3	4	5	6	7	8	9	QTY	DRAWING NUMBER	REV LTR	DRAWING TITLE RO 68-164	DWG SIZE
1				X						1	W[illegible]X1	N/C	MODULE - NOISE FILTER	A
2					X					REF	W4541	N/C	" " "	F
3					X					REF	S40746	N/C	TEST SPEC.	A
4														
5				X						1	SP30409	A	TRANSFORMER	A
6				X						1	SP30410	B	TRANSFORMER	A
7				X						1	SP30411	A	TRANSFORMER	A
8														
9														
10			X							1	708111-2	N/C	MATRIX SUB-ASSY (LOGIC)	F
11														
12														
13				X						1	W4299X2	N/C	MODULE - COMMUTATOR GATING	A
14					X					REF.	W4299	N/C	" " "	E
15					X					REF	S40814		TEST SPEC.	
16														
17				X						2	W4[illegible]X2	B	MODULE-(+)20V. POST REG.	A
18					X					REF	W4[illegible]	A	" " " "	F
19					X					REF	S46740		TEST SPEC.	
20														
21				X						1	W4351X2	B	MODULE - (-)20V. POST REG.	A
22					X					REF	W4351	N/C	" " " "	E
23					X					REF	S46742		TEST SPEC.	
24														
				X						1	W4352X2	A	MODULE - (-)6V POST REG.	A
6					X					REF	W4352	N/C	" " " "	F
27					X					REF	S46739		TEST SPEC.	
28														
29				X						1	W4353X2	B	MODULE -(+)6V. POST REG.	A
30					X					REF	W4353	N/C	" " " "	F
31					X					REF	S46743		TEST SPEC.	
32														
33				X						4	W4479X3	N/C	MODULE - LATCH	A
34					X					REF	W4479	A	" "	D
35					X					REF	S46750		TEST SPEC.	
36														
37				X						1	W4435X3	N/C	MODULE - INVERTER	A
38					X					REF	W4435	N/C	" "	D
39					X					REF	S46365		TEST SPEC.	
40														
41				X						1	W4435X4	N/C	MODULE - INVERTER	A
42					X					REF	W4435	N/C	" "	D
43					X					REF	S46365		TEST SPEC.	
44														
45				X						2	W4435X5	N/C	MODULE - INVERTER	A
46					X					REF	W4435	N/C	" "	D
47					X					REF	S46365		TEST SPEC.	
48				X						1	W4523-1	N/C	MODULE - VAR. L.P. FILTER SUB.	A
49					X					REF	W4523	N/C	" " " " "	F
					X					REF	S46[illegible]	A	TEST SPEC.	A

MODEL NO. ML337-1

TITLE—	SIZE	CODE IDENT NO.	DWG NO.	REV
MASTER DRAWING LIST MAINBODY ELECT. ASSY - - TRIAXIAL SEARCH COIL MAGNE. OGO-F-22	A	13126	MDL 708100-101	

SCALE — RELEASED SHEET 3 OF

247

LINE NO.	ASSEMBLY POSITION 1	2	3	4	5	6	7	8	9	QTY	DRAWING NUMBER	REV LTR	DRAWING TITLE RO 68-164	DWG SIZE
1														
2														
3				X						3	W4535XI	B	MODULE - IFC BUFFER	A
4					X					REF	W4535	N/C	" " "	D
5					X					REF	S46718	A	TEST SPEC.	A
6														
7				X						1	W4536XI	A	MODULE - IFC ATTENUATOR	A
8					X					REF	W4536	N/C	" " "	D
9					X					REF	S46720	A	TEST SPEC.	A
10														
11				X						1	W4537XI	N/C	MODULE - B.W. STATUS	A
12					X					REF	W4537	N/C	" " "	D
13					X					REF	S46721	N/C	TEST SPEC.	A
14														
15				X						1	W4538XI	N/C	MODULE - COMMUTATOR STATUS	A
16					X					REF	W4538	N/C	" " "	D
17					X					REF	S46722	N/C	TEST SPEC.	A
18														
19				X						1	W4539XI	A	MODULE - VCO/IFC/PWR STATUS	A
20					X					REF	W4539	N/C	" " "	D
21					X					REF	S46723	A	TEST SPEC.	A
22														
23				X						1	W4540XI	N/C	MODULE - SPECT GAIN & COMM	A
24					X					REF	W4540	N/C	" " "	D
25					X					REF	S46724	A	TEST SPEC.	A
26														
27				X						5	W4544XI	A	MODULE - IMPULSE CATCH	A
28					X					REF	W4544	N/C	" " "	D
29					X					REF	S46731	A	TEST SPEC.	A
30														
31				X						1	W7270XI	N/C	MODULE - 8 SEC. MARK GEN.	A
32					X					REF	W7270	N/C	" " " " "	E
33					X					REF	S46713	A	TEST SPEC.	A
34														
35				X						1	W7271XI	N/C	MODULE - MOD 7 COUNTER	A
36					X					REF	W7271	N/C	" " " "	E
37					X					REF	S46714	N/C	TEST SPEC.	A
38														
39				X						1	W7272XI	N/C	MODULE - GAIN CONTROL LOGIC	A
40					X					REF	W7272	N/C	" " "	E
41					X					REF	S46715	B	TEST SPEC.	A
42														
43				X						1	W7273XI	N/C	MODULE - IFC CONTROL LOGIC	A
44					X						W7273	N/C	" " " "	E
45					X						S46716	A	TEST SPEC.	A
46														
47				X						1	W7274XI	N/C	MODULE - IFC SIGNAL LOGIC	A
48					X					REF	W7274	N/C	" " " "	E
49					X					REF	S46717	N/C	TEST SPEC.	A
50														

MODEL NO. ML337-1

TITLE—	SIZE	CODE IDENT NO.	DWG NO.	RE
MASTER DRAWING LIST MAINBODY ELECT. ASSY - TRIAXIAL SEARCH COIL MAGN. OGO-F-22	A	13126	MDL 708100-101	

SCALE ——— RELEASED SHEET 4 OF

RO 68-164

LINE NO.	ASSEMBLY POSITION 1	2	3	4	5	6	7	8	9	QTY	DRAWING NUMBER	REV LTR	DRAWING TITLE	DWG SIZE
1														
2				X						1	W7275 X1	N/C	MODULE - BW. CONTROL LOGIC	A
3					X					REF	W7275	N/C	" " " "	E
4					X					REF	S46719	A	TEST SPEC.	A
5														
6				X						1	SP30547-13	E	JIG - MATRIX	J
7														
8														
9				X						1	T708115-101	N/C	HOOKUP BOARD ASSY (LOGIC)	A/W
10					X					1	T708115-1	N/C	" " "	A/W
11														
12				X						1	T708115-102	N/C	POSITIONING BOARD ASSY (LOGIC)	A/W
13					X					1	T708115-2	N/C	" " "	A/W
14														
15				X						1	T708116-101	N/C	MATRIX ASSY (LOGIC)	A/W
16					X					1	T708116-1	N/C	" WAFER "	A/W
17														
18				X						2	T708117-1	N/C	SPACER	A/W
19														
20														
21														
22			X							1	SP30920-1	N/C	HOUSING	E
23			X							1	SP30543-1	G	COVER	J
24			X							1	SP30307-49	P	STAMP (UNIVERSAL)	C
25														
26			X							REF	703103	E	SCHEMATIC (PWR SUP & LOGIC)	E
27			X							1	SP30193-2	A	BRACKET	C
28			X							1	SP30921-1	N/C	BRACKET	C
29			X							REF	S46733	A	TEST SPEC.	A
30														
31														
32		X								1	703104-101	A	WIREFORM - WIDEBAND ASSY	F
33			X							1	703104-1	A	MATRIX SUB-ASSY	F
34														
35				X						1	T708105-101	A	HOOK UP BOARD ASSY	A/W
36					X					1	T708105-1	A	" "	A/W
37														
38				X						1	T708105-102	A	POSITIONING BOARD ASSY	A/W
39					X					1	T708105-2	A	" "	A/W
40				X						1	T708106-101	A	MATRIX ASSY	A/W
41					X					1	T708106-1	A	" WAFER	A/W
42														
43				X						2	T708107-1	N/C	SPACER	A/W
44				X						2	T708107-2	N/C	SPACER (WASHER)	A/W
45				X						1	W4311 X2	B	MODULE - (+)2.5 VOLT REG.	A
46					X					REF	W4311	N/C	" " " "	J
47					X					REF	S40833		TEST SPEC.	
48				X						3	W4312 X2	N/C	MODULE - VCO L.P. FILTER	A
49					X					REF	W4312	N/C	" " "	F
50					X					REF	S40834		TEST SPEC.	

MODEL NO. ML 337-1

TITLE—	SIZE	CODE IDENT NO.	DWG NO.	REV
MASTER DRAWING LIST MAINBODY ELECT. ASSY - TRIAXIAL SEARCH COIL MAGN. OGO-F-22	A	13126	ML 708100-101	
	SCALE	RELEASED	SHEET 5 OF [illegible]	

RO 68-164

LINE NO.	ASSEMBLY POSITION 1	2	3	4	5	6	7	8	9	QTY	DRAWING NUMBER	REV LTR	DRAWING TITLE	DWG SIZE
1														
2				X						1	W4546X2	A	MODULE-VCO (52.5KHz)	A
3					X					REF	W4546	N/C	" " "	D
4					X					REF	S46759		TEST SPEC.	A
5														
6				X						1	W4546X1	A	MODULE-VCO (40 KHz)	A
7					X					REF	W4546	N/C	" " "	D
8					X					REF	S46759		TEST SPEC.	A
9														
10				X						1	W4546X3	A	MODULE-VCO (70KHz)	A
11					X					REF	W4546	N/C	" " "	D
12					X					REF	S46759		TEST SPEC.	A
13														
14				X						3	W4316X3	C	MODULE-GAIN CHANGE AMPL.	A
15					X					REF	W4316	N/C	" " " "	D
16					X					REF	S40838		TEST SPEC.	A
17														
18				X						3	W4316X4	D	MODULE-GAIN CHANGE AMPL.	A
19					X					REF	W4316	N/C	" " " "	D
20					X					REF	S40838		TEST SPEC.	A
21														
22				X						6	W4317X3	B	MODULE-OUTPUT AMPL.	A
23					X					REF	W4317	N/C	" " "	D
24					X					REF	S40839		TEST SPEC.	A
25														
26				X						3	W4512X1	A	MODULE-400 Hz NOTCH FIL.	A
27					X					REF	"	N/C	" " " " "	E
28					X					REF	S46660	A	TEST SPEC.	A
29														
30				X						3	W4518X1	B	MODULE-FIXED GAIN AMPL.	A
31					X					REF	W4518	N/C	" " " "	D
32					X					REF	S46661	A	TEST SPEC.	A
33														
34				X						3	W4518X2	E	MODULE-FIXED GAIN AMPL.	A
35					X					REF	W4518	N/C	" " " "	D
36					X					REF	S46661	A	TEST SPEC.	A
37														
38				X						3	W4521X1	N/C	MODULE-1850 Hz L.P. FIL.	A
39					X					REF	W4521	N/C	" " " " "	E
40					X					REF	S46665	A	TEST SPEC.	A
41														
42				X						6	W4522X1	B	MODULE-VARIABLE L.P. FIL.	A
43					X					REF	W4522	N/C	" " " "	F
44					X					REF	S46666	N/C	TEST SPEC.	A
45				X						3	W4524X1	B	MODULE-W.F. SWITCH	A
46					X					REF	W4524	N/C	" " "	E
47					X					REF	S46668	N/C	TEST SPEC.	A
48				X						1	W4531X1	A	MODULE-VCO SUM & OUTPUT	A
49					X					REF	W4531	N/C	" " " "	E
					X					REF	S46690	B	TEST SPEC.	A

MODEL NO. ML337-1

TITLE—	SIZE	CODE IDENT NO.	DWG NO.	REV
MASTER DRAWING LIST MAINBODY ELECT. ASSY - TRIAXIAL SEARCH COIL MAGN. OGO-F-22	A	13126	MDL 708100-101	

SCALE — RELEASED SHEET

LINE NO.	ASSEMBLY POSITION 1	2	3	4	5	6	7	8	9	QTY	DRAWING NUMBER	REV LTR	DRAWING TITLE RO 68-164	DWG SIZE
1														
2				X						REF.	SP30353-9	G	VIG-MATRIX	D
3			X							1	SP30342-101	F	HOUSING, ASSY	J
4				X						1	SP30342-1	F	"	J
5			X							1	SP30343-2	G	COVER	J
6			X							1	SP30343-3	G	COVER	J
7														
8			X							REF	708101	D	SCHEMATIC	E
9														
10			X							1	SP30307-50	P	STAMP (UNIVERSAL)	C
11			X							REF.	546732	N/C	TEST SPEC.	D
12														
13														
14		X								1	703103-101	A	ASSY- SPECTRUM ANALYZER	D
15														
16			X							1	703108-1	A	MATRIX SUB-ASSY	D
17				X						1	T703109-1	N/C	HOOKUP BOARD	A/W
18				X						1	T703109-102	N/C	POSITIONING BOARD ASSY	A/W
19					X					1	T703109-2	N/C	" "	A/W
20														
21				X						1	T703110-101	N/C	MATRIX ASSY	A/W
22					X					1	T703110-1	N/C	" WAFER	A/W
23														
24				X						2	T703107-1	N/C	SPACER	A/W
25				X						2	T703107-2	N/C	SPACER-WASHER	A/W
26														
27														
28				X						3	W4297X8	N/C	MODULE-BAND PASS AMPL.	A
29					X					REF	W4297	A	" " " "	D
30					X					REF	540812		TEST SPEC.	A
31				X						3	W4297X9	N/C	MODULE-BAND PASS AMPL.	A
32					X					REF	W4297	A	" " " "	D
33					X					REF	540812		TEST SPEC.	A
34				X						3	W4297X10	N/C	MODULE-BAND PASS AMPL.	A
35					X					REF	W4297	A	" " " "	D
36					X					REF	540812		TEST SPEC.	A
37				X						3	W4297X11	N/C	MODULE-BAND PASS AMPL.	A
38					X					REF	W4297	A	" " " "	D
39					X					REF	540812		TEST SPEC.	A
40				X						3	W4297X12	N/C	MODULE-BAND PASS AMPL.	A
41					X					REF.	W4297	A	" " " "	D
42					X					REF	540812		TEST SPEC.	A
43				X						3	W4297X13	N/C	MODULE-BAND PASS AMPL.	A
44					X					REF	W4297	A	" " " "	D
45					X					REF	540812		TEST SPEC.	A
46														
47				X						3	W4297X14	N/C	MODULE-BAND PASS AMPL.	A
48					X					REF	W4297	A	" " " "	D
49					X					REF	540812		TEST SPEC.	A
50														

MODEL NO. ML357-1

TITLE- -	SIZE	CODE IDENT NO.	DWG NO.	REV
MASTER DRAWING LIST MAINBODY ELECT. ASSY - TRIAXIAL SEARCH COIL MAGNETOMETER OGO-F-22	A	13126	MDL 708100-101	25
SCALE —		RELEASED		SHEET 7 OF

RO 68-164

LINE NO.	ASSEMBLY POSITION 1	2	3	4	5	6	7	8	9	QTY	DRAWING NUMBER	REV LTR	DRAWING TITLE	DWG SIZE
1														
2				X						6	W4[illegible]98X4	B	MODULE - DETECTOR	J
3					X					REF	W4[illegible]98	N/C	" "	J
4					X					REF	S40813		TEST SPEC.	A
5														
6				X						15	W4[illegible]98X5	A	MODULE - DETECTOR	A
7					X					REF.	W4298	N/C	" "	J
8					X					REF.	S40815		TEST SPEC.	A
9														
10				X						1	W4301X2	N/C	MODULE - (+) 2.6 VOLT REG.	A
11					X					REF	W4301	N/C	" " " "	D
12					X					REF	S40821		TEST SPEC.	A
13														
14				X						3	W4300X2	B	MODULE - COMMUTATOR	A
15					X					REF	W4300	N/C	" "	E
16					X					REF	S40815		TEST SPEC.	A
17														
18				X						1	W4519X1	N/C	MODULE - DETECTOR DUMP	A
19					X					REF	W4519	N/C	" " "	E
20					X					REF.	S46662	N/C	TEST SPEC.	A
21														
22				X						1	W4525X1	N/C	MODULE - (-) 1 VOLT REG.	A
23					X					REF.	W4525	N/C	" " "	D
24					X					REF	S46669	N/C	TEST SPEC.	A
25														
26				X						REF	SP30253-9	G	JIG - MATRIX	D
27														
28			X							1	SP30342-102	F	HOUSING ASSY	J
29				X						1	SP30342-2	F	HOUSING	J
30			X							1	SP30343-4	G	COVER	J
31														
32			X							1	SP30307-51	P	STAMP (UNIVERSAL)	C
33			X							REF	708102	A	SCHEMATIC	E
34														
35														
36														
37		X								1	SP30344-3	A	HOUSING	J
38		X								1	SP30344-2	A	COVER	J
39		X								A/R	SP30305-1	B	STAMP (NAMEPLATE)	C
40		X								A/R	SP30306-28	X	STAMP (MODEL & PART No)	D
41														
42		X								REF.	708119	A	WIRING DIAGRAM	E
43		X								REF.	708120	A	WIRING LIST	A
44														
45		X								A/R	SP30307-46	P	STAMP (UNIVERSAL)	C
46		X								A/R	SP30307-47	P	STAMP (UNIVERSAL)	C
47		X								A/R	SP30307-48	P	STAMP (UNIVERSAL)	C
48														
49		X								REF.	S46733	N/C	TEST SPEC.	A
50														

MODEL NO. ML337-1

TITLE—	SIZE	CODE IDENT NO.	DWG NO.	REV
MASTER DRAWING LIST MAINBODY ELECT. ASSY - TRIAXIAL SEARCH COIL MAGN. OGO-F-22	A	13126	MDL 708100-101	

SCALE — RELEASED — SHEET 9 OF

LINE NO.	ASSEMBLY POSITION 1	2	3	4	5	6	7	8	9	QTY	DRAWING NUMBER	REV LTR	DRAWING TITLE	DWG SIZE
1														
2										REF	S[illegible]88	E	RIBBON & WIRE SPEC.	A
3										REF	S[illegible]72	A	FABRICATION & WORKMANSHIP SPEC.	A
4										REF	S40[illegible]81	N/C	WELDING SPEC.	A
5										REF	S[illegible]091	N/C	CONFORMAL COATING SPEC.	A
6										REF	[illegible]	B	FORMING OF [illegible] ASSY SPEC.	A
7										REF	S[illegible]94	A	MATRIX FABR. SPEC.	A
8										REF	S40149	A	GENERAL BONDING SPEC.	A
9										REF	S40379	N/C	SPOT-POTTING SPEC.	A
10										REF	S40093	A	CONNECTOR SETTING SPEC.	A
11										REF	S[illegible]	N/C	SOLDERING SPEC.	A
12										REF	S[illegible]	B	IDENTIFICATION SPEC.	A
13										REF	S40151	B	BONDING & SPOT POTTING SPEC	A
14														
15										REF	AMS 3654		TUBING	
16														
17										REF	MIL-W-16878 D		WIRE-HOOK UP, SPEC.	
18														
19										REF	QQ-C-576a		COPPER-SHIM, SPEC.	
20														
21										REF	MIL-P-13177		MIL SPEC.-EPOXY, GLASS SHT.	
22														
23														
24														
25														
26														
27														
28														
29														
30														
31														
32														
33														
34														
35														
36														
37														
38														
39														
40														
41														
42														
43														
44														
45														
46														
47														
48														
49														

MODEL NO. ML 337-1

TITLE—	SIZE	CODE IDENT NO.	DWG NO.	RE.
MASTER DRAWING LIST MAINBODY ELECT. ASSY TRIAXIAL SEARCH COIL MAGN. OGO-E-22	A	13126	MDL 708100-101	

253

APPLICATION		PARTS DISPOSITION	DWG. NO.	REV
NEXT ASSY	FINAL ASSY	1. USE 3. CANNOT BE REWORKED 2. REWORK 4. RECORD 5.	MDL 708300-101	

REVISIONS

DISP	EFF	REV	DESCRIPTION	BY	CK	DATE	APPD

SHEET	REV		
INDEX	SHEET	1	2

INTERPRET THIS DRAWING PER STANDARDS IN MIL-D-70327
DIMENSIONS ARE IN INCHES
TOLERANCES ON
DECIMALS ± .1, .XX ± .03, .XXX ± .010 — ANGLES ± 0° 30', .XXXX ± .0050
√ SURFACE ROUGHNESS

HOLE DIA.	TOLERANCE
.0135 THRU .125	+ .004 - .001
.126 THRU .250	+ .005 - .001
.251 THRU .500	+ .006 - .001
.501 THRU .750	+ .008 - .001
.751 THRU 1.000	+ .010 - .001
1.000 THRU 2.000	+ .012 - .001
2.001 AND OVER	LINEAR

CONTRACT NO.	NAS 5-951630
DRAWN	P. Goldin 4/15/67
CHECK	
MECH ENGR	
ELECT ENGR	[illegible] 23 Aug 67
PROJ MGR	[illegible] 8/23/67
APPD	
DESIGN ACTIVITY APPD	
CUSTOMER	

M L — MARSHALL LABORATORIES
TORRANCE, CALIFORNIA

TITLE: SENSOR ASSEMBLY - SEARCH COIL MAGN. OGO-F-22

SIZE	CODE IDENT NO.	DWG NO.	REV
A	13126	MDL 708300-101	

SCALE — RELEASED [illegible] SHEET 1 OF 2

LINE NO	ASSEMBLY POSITION 1	2	3	4	5	6	7	8	9	QTY	DRAWING NUMBER	REV LTR	DRAWING TITLE	DWG SIZE
1	X										708300-101	C	SENSOR ASSY (1-AXIS)	F
2		X								REF	S46725	A	TEST PROCEDURE	
3		X								1	[illegible]-1	C	SENSOR SUB-ASSY	F
4			X							1	708300-2	C	BRACKET	F
5			X							1	708300-3	C	TERMINAL BOARD	F
6														
7			X							3	708300-4	C	BLOCK, POSITIONING	F
8														
9			X							1	SP30118	A	INSULATIVE SHEET	B
10														
11			X							1	SP30149-105	K	HOUSING & COVER	D
12				X						1	SP30139-12	K	HOUSING	D
13				X						1	SP30148-10	K	COVER	D
14														
15			X							2	SP30153-13	L	COIL	C
16				X						1	SP30391-1	N/C	BOBBIN	C
17														
18			X							2	SP30304-1	N/C	TUBE - EPOXY	C
19			X							1	SP30170-5	D	CORE, MAGNETIC	B
20														
21														
22			X							1	W7263X1	A	MODULE - SENSOR, PREAMPL.	A
23				X						REF	W7263	N/C	" " "	E
24				X						REF	S46704	B	TEST SPEC.	A
25														
26			X							1	W7269X1	A	MODULE - PROPORTIONAL HEATER	A
27				X						REF	W7269	N/C	" " "	F
28				X						REF	S46705	A	TEST SPEC.	A
29														
30			X							REF	SP30143-11	K	COVER (FIXTURE)	D
31			X							REF	707742-104	C	FOAMING FIXTURE	J
32			X							A/R	S40522	N/C	BONDING MATERIAL	A
33		X								REF	SP30305-2	B	STAMP (NAMEPLATE)	C
34		X								REF	SP30307-40	P	STAMP	C
35		X								REF	SP30306-25	X	STAMP (MODEL & PART Nº)	D
36														
37		X								REF	SP30307-1	P	STAMP	C
38		X								REF	SP30307-37	P	STAMP	C
39		X								REF	SP30307-43	P	STAMP	C
40														
41										REF	S40093	A	BONDING OF ELECT. CONNECTORS	A
42										REF	S40109	A	CONDUCTIVE EPOXY SPEC.	A
43										REF	S40313	N/C	BONDING SPEC.	A
44										REF	S40072	A	MANUFACTURING SPEC.	A
45										REF	S40092	B	FOAMING SPEC.	A
46										REF	S40111	B	IDENTIFICATION SPEC.	A
47										REF	S40019	A	PROTECTIVE FINISH SPEC.	A
48										REF	S4[illegible]279	N/C	SPOT POTTING SPEC.	A
49										REF	S40[illegible]	A	GENERAL BONDING SPEC.	A
50										REF	S40125	N/C	SOLDERING SPEC.	A

MODEL NO. ML 338-1

TITLE—	SIZE	CODE IDENT NO.	DWG NO.	REV
MASTER DRAWING LIST SENSOR ASSEMBLY- SEARCH COIL MAGN.	A	13126	MDL 708300-101	

SCALE | RELEASED | SHEET 2 OF

APPLICATION	
NEXT ASSY	FINAL ASSY

PARTS DISPOSITION
1. USE 2. REWORK 3. CANNOT BE REWORKED 4. RECORD 5.

DWG NO. MDL 708400-101 REV

REVISIONS

DISP	EFF	REV	DESCRIPTION	BY	CK	DATE	APPD

SHEET	REV		
INDEX	SHEET	1	2

INTERPRET THIS DRAWING PER STANDARDS IN MIL-D-70327
DIMENSIONS ARE IN INCHES
TOLERANCES ON
DECIMALS .X ± .1 .XX ± .03 .XXX ± .010
ANGLES ± 0° 30' .XXXX ± .0050
√ SURFACE ROUGHNESS

HOLE DIA.	TOLERANCE
.0135 THRU .125	+ .004 - .001
.126 THRU .250	+ .005 - .001
.251 THRU .500	+ .006 - .001
.501 THRU .750	+ .008 - .001
.751 THRU 1.000	+ .010 - .001
1.000 THRU 2.000	+ .012 - .001

CONTRACT NO. № 951630
DRAWN P. Gibson 9 Aug '67
CHECK
MECH ENGR
ELECT ENGR [illegible] 23 Aug 67
PROJ MGR [illegible] 8/23/67
APPD
DESIGN ACTIVITY APPD
CUSTOMER

ML MARSHALL LABORATORIES
TORRANCE, CALIFORNIA

TITLE SIMULATOR UNIT - OGO-F-22 SEARCH COIL MAGN. B.T.E. (MK 347-1)

SIZE	CODE IDENT NO.	DWG NO.	REV
A	13126	MDL 708400-101	

SCALE — RELEASED [illegible] 1967 SHEET 1 OF 2

LINE NO	1	2	3	4	5	6	7	8	9	QTY	DRAWING NUMBER	REV LTR	DRAWING TITLE	DWG SIZE
1	X										708400-101	N/C	S[illegible] UNIT	J
2		X								REF	70[illegible]01	N/C	[illegible]	E
3		X								REF	70[illegible]	N/C	[illegible] DIAGRAM	D
4														
5		X								1	708403-1	N/C	PANEL - FRONT	J
6														
7		X								1	708400-1	N/C	PANEL - REAR	J
8		X								1	708400-2	N/C	CHASSIS	J
9		X								1	708400-3	N/C	BRACKET, COMPONENT MTG	J
10		X								2	708400-4	N/C	BRACKET, CARD CAGE	J
11		X								1	708[illegible]	A	TEST CABLE ASSY	D
12		X								1	708422	A	TEST CABLE ASSY	E
13		X								1	708408	A	ASSY - [illegible] PULSE	F
14		X								1	708427	A	ASSY - SYNC GENERATOR	F
15														
16		X								1	708[illegible]	A	ASSY - INDEX PULSE	F
17		X								1	708[illegible]5	N/C	ASSY - PHASE DETECTOR	F
18														
19		X								REF	S40791		TEST SPEC.	A
20														
21														
22		X								REF	S40111	B	IDENTIFICATION SPEC.	A
23		X								REF	S40126	N/C	SOLDERING SPEC.	A
24														
25		X								REF	S40118	A	PROTECTIVE FINISH SPEC.	A
26														
27		X								REF	MIL-W-16878		WIRE-HOOKUP, SPEC.	
28		X								REF	QQ-S-571		SOLDER SPEC.	
29		X								REF	QQ-C-576		COPPER-SHEET, SPEC.	
30														
31														
32														
33														
34														
35														
36														
37														
38														
39														
40														
41														
42														
43														
44														
45														
46														
47														
48														
49														
50														

MODEL NO. ML347-1

TITLE	SIZE	CODE IDENT NO.	DWG NO	REV
MASTER DRAWING LIST SIMULATOR UNIT 090-F-22 SEARCH COIL MAGN. B.T.E.	A	13126	MDL 708400-101	
	SCALE	RELEASED	SHEET 2 OF	

251

APPLICATION		PARTS DISPOSITION	DWG. NO.	REV
NEXT ASSY	FINAL ASSY	1 USE 2 REWORK 3. CANNOT BE REWORKED 4 RECORD 5	MDL 708450-101	

REVISIONS

DISP	EFF	REV	DESCRIPTION	BY	CK	DATE	APPD

SHEET INDEX	REV		
	SHEET	1	2

INTERPRET THIS DRAWING PER STANDARDS IN MIL D 70327
DIMENSIONS ARE IN INCHES
TOLERANCES ON

DECIMALS	ANGLES
.X ± .1	± 0° 30'
.XX ± .03	
.XXX ± .010	.XXXX ± .0050

√ SURFACE ROUGHNESS

HOLE DIA			TOLERANCE
.0135	THRU	.125	.004 - .001
.126	THRU	.250	.005 - .001
.251	THRU	.500	.006 - .001
.501	THRU	.750	.008 - .001
.751	THRU	1.000	.010 - .001
1.000	THRU	2.000	.012 - .001
2.001	AND OVER		LINEAR

CONTRACT NO. N° 951630
DRAWN Gotlieb 9/23/66
CHECK
MECH ENGR
ELECT ENGR 23 Aug 67
PROJ MGR 8/23/67
APPD
DESIGN ACTIVITY APPD
CUSTOMER

M L — **MARSHALL LABORATORIES**
TORRANCE, CALIFORNIA

TITLE MONITOR UNIT - OGO-F-E2 SEARCH COIL MAG. B.T.E. (ML348-1)

SIZE	CODE IDENT NO	DWG NO.	REV
A	13126	MDL 708450-101	

SCALE — RELEASED 1967 SHEET 1 OF 2

LINE NO	ASSEMBLY POSITION 1	2	3	4	5	6	7	8	9	QTY	DRAWING NUMBER	REV LTR	DRAWING TITLE	DWG SIZE
1	X										708450-101	N/C	MONITOR UNIT	J
2		X								REF	708451	N/C	SCHEMATIC	[illegible]
3		X								REF	708452	N/C	WIRING DIAGRAM	D
4														
5		X								1	708453-1	N/C	PANEL - FRONT	J
6		X								1	708450-1	N/C	CHASSIS	J
7		X								1	708450-2	N/C	PANEL - REAR	J
8		X								1	708440-101	N/C	SPECTRUM GAIN & CHAN STATUS	J
9		X								1	708441-101	N/C	WAVEFORM GAIN & MODE STATUS	J
10														
11		X								1	708442-101	N/C	INST DMC, IFC, SCO STATUS	J
12		X								1	708443-101	N/C	SPECTRUM CHANNEL	J
13														
14		X								1	708444-101	N/C	WAVEFORM BANDWIDTH	J
15		X								REF	708490	C	CABLE ASSY	D
16		X								REF	S26910	A	TEST SPEC.	A
17														
18														
19		X								REF	S40111	B	IDENTIFICATION SPEC.	A
20		X								REF	S40118	A	PROTECTIVE FINISH SPEC.	A
21		X								REF	S40126	N/C	SOLDERING SPEC.	A
22														
23		X								REF	MIL-W-16878		WIRE-HOOKUP SPEC.	
24		X								REF	QQ-S-571		SOLDER SPEC.	
25														
26														
27														
28														
29														
30														
31														
32														
33														
34														
35														
36														
37														
38														
39														
40														
41														
42														
43														
44														
45														
46														
47														
48														
49														
50														

MODEL NO. ML34B-1

TITLE--	SIZE	CODE IDENT NO.	DWG NO.	REV
MASTER DRAWING LIST MONITOR UNIT - OSC F-22 SEARCH [illegible]	A	13126	MDL 708450-101	

APPENDIX D
TEST SPECIFICATIONS

PARTS DISPOSITION

1. USE
2. REWORK
3. CANNOT BE REWORKED
4. RECORD
5. ______________

SPEC NO. S 46765 REV B

REVISIONS RO 68-164

DISP	EFF	REV	DESCRIPTION	BY	CK	DATE	APPROVAL
4	S/N 1 and Up	A	Complete Revision	[illegible]	[illegible]	7 Aug 67	[illegible]
4	RCO	B	Corrected method of noise measurement in para 3.6.2.9 & 3.6.2.10. Revised Figure 5.	RJN	[illegible]	31 Aug 67	[illegible] 9/1/67

REV B SPEC NO. S 46765

SHEET INDEX	REV	B		A		B	A			B		B	A			A	A	A	A	A
	SHEET	1	2	3	4	5	6	7	8	9	10	11	12	13	14	15	16	17	18	19
SHEET INDEX	REV																			
	SHEET																			

CONTRACT NO. 951630/7-080		
PREP K. Entmann	7-6-67	
CK		
ENGR [illegible]	11 July 67	
APPD [illegible]	12 Jul 67	
APPD		
QC APPD [illegible]	[illegible]	
DESIGN APPD [illegible]		
CUSTOMER		

M L — MARSHALL LABORATORIES
TORRANCE, CALIFORNIA

TITLE
Main Body Electronics, ML337-1, OGO-F
Triaxial S.C. Magnetometer, Part No. 708100
Test Procedure for

SIZE	CODE IDENT NO.	SPECIFICATION NO.	REV
A	13126	S 46765	B

RELEASED JUL 1 9 1967 SHEET 1 OF 19

RO 68-164

1.0 SCOPE

This specification covers the electrical checkout of the Main Body Electronics, ML 337-1, OGO-F Triaxial S.C. Magnetometer.

2.0 APPLICABLE DOCUMENTS

2.1 The following documents, of the issue in effect on the date of invitation for bids, form a part of this specification.

Drawings

Marshall Laboratories
Form ML 4-21 (7-67) Data Sheet

	OGO-F Instrument Report
708000	OGO-F Wiring Interface Diagram
708002	Main body Mechanical Configuration
708006	Functional Block Diagram
708401	BTE, Simulator Unit Schematic
708451	BTE, Monitor Unit Schematic
708101	Waveform Blivet Schematic
708102	Spectrum Blivet
708103	Power Supply & Logic Blivet
708119	Electronic System Schematic
708100	Main Body Assembly

2.2 Precedence of Governing Documents. Unless otherwise specified when a requirement of an applicable drawing is in conflict with a requirement specified herein, the requirement specified on the drawing shall apply.

3.0 REQUIREMENTS

3.1 Acceptable results are contigent upon the use of the material and equipment as specified herein. Substitution of material or equipment will not be allowed without prior written approval of Marshall Laboratories Engineering and Quality Control Groups.

3.2 Test Equipment. The following test equipment, or equivalent, shall be used to test the Main Body Electronics.

A. Oscilloscope, Tektronix, with type "W" plug in.

B. Power Supplies, Hewlett-Packard, Model HP721A.

C. Digital Voltmeter, 1 mv resolution.

D. Function Generator, Hewlett-Packard, Model 3300A.

E. Function Generator, Wavetech.

F. Counter, Hewlett-Packard, Model 521A.

G. Breakout Boxes, ML52306, 50 pin, and ML 52321, 9 Pin.

H. BTE: Simulator Unit ML347-1
Monitor Unit ML348-1
Cables; 708490, 708491, 708492

I. Pulse Generator, Rutherford, B15.

3.3 Special Test Equipment. The following special test equipment not available commercially, shall be used to check out the module.

Peak Detector, SK708991

3.4 Test Setup. Test setups as noted.

3.5 Remarks:

3.5.1 The Main Body Electronics shall be exercised per this specification at -15°C, +25°C, and +55°C except paragraphs marked with an asterisk. Paragraphs marked with an asterisk (*) will be performed only at room temperature. Paragraphs marked with a double asterisk (**) will be performed only during the initial test.

3.5.2 All data are to be recorded on Form ML 4-21 (7-67) tables.

3.6 Test Procedure

(**) 3.6.1 Interface Impedance. Connect breakout boxes to J1 and J2 of the instrument. Measure and record resistance (use Triplet 630 VOM (On the X100 Scale Only) as required in Table 1.

3.6.2 Power Supply. Set up as shown in Figure 1.

3.6.2.1 D. C. Variation of +28 Volts. Monitor +28 volt input with an external DVM connected between " +28 " and " +28 R " on the monitor unit. Monitor 22 volt preregulator output between " +22V " and " +28 R ". Measure and record as shown in Table 2.

(*) 3.6.2.2 50 Volt Pulses on the +28 Volt Line. Set up as shown in Figure 2. Set +28 volts line to +28 V ± 10 mv. (Note that BTE does not drive instrument J2). Apply a 22 volt (50 volts total above ground) 10 ± 1 millisecond pulse at a 10 ± 1 Hz rate. Monitor the 22 volt preregulator output test points at " +22V " and " +28R " with a scope. The variation of +22 volt preregulator output shall be less than 100 millivolts p-p. Record actual variation on Table 2.

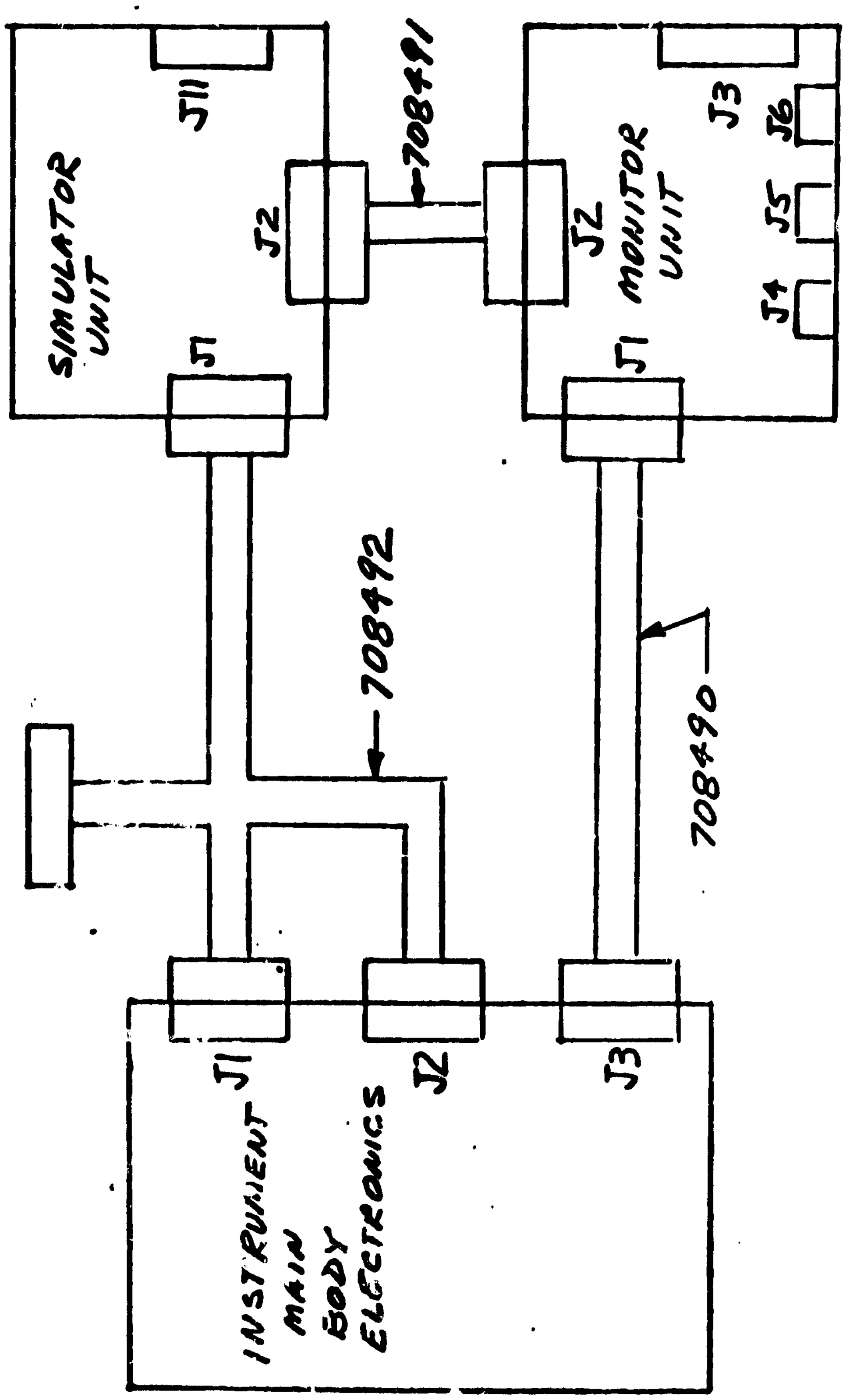

Figure 1
Test Setup

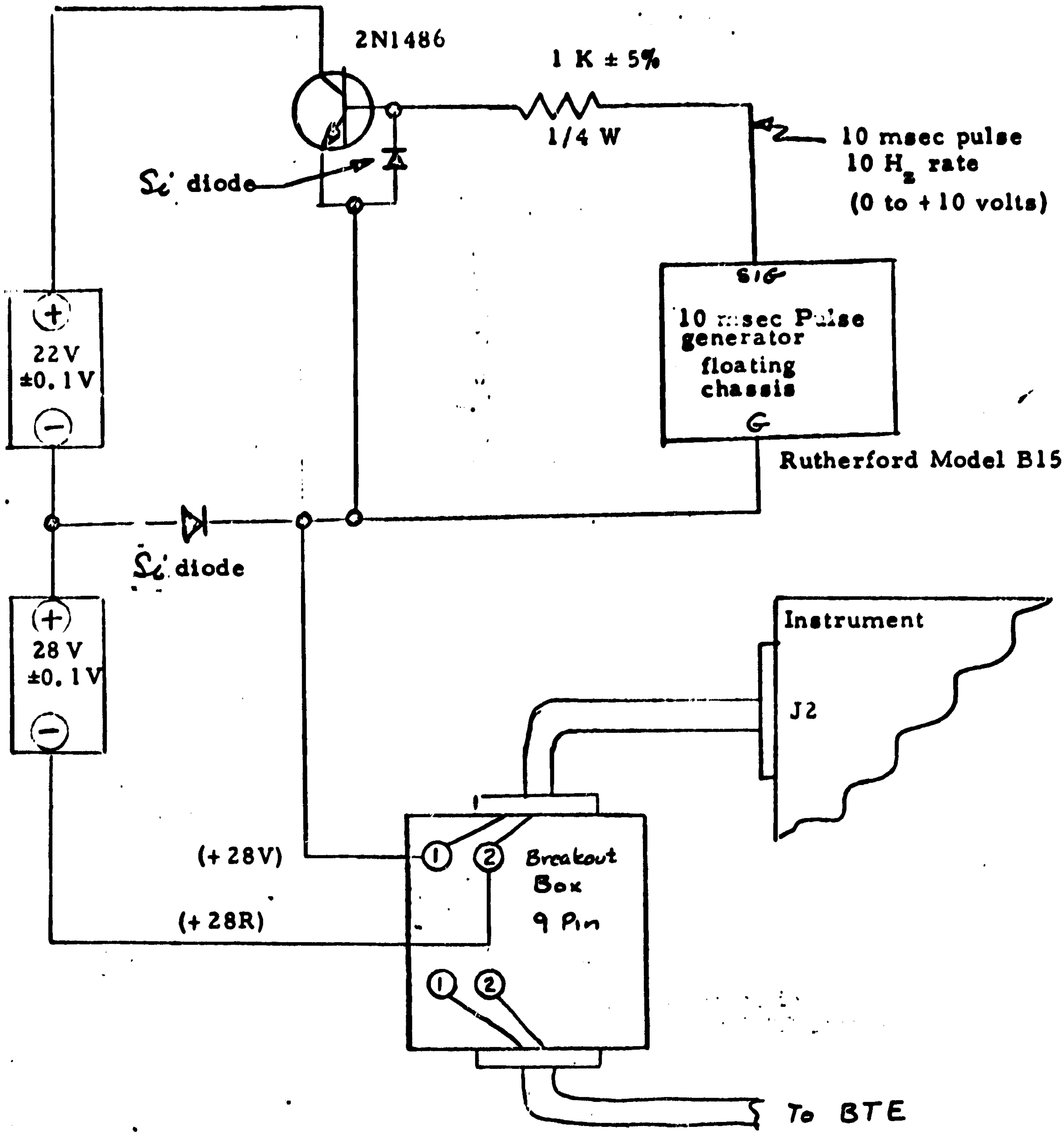

Figure 2

50 Volt Pulse On + 28 Volt Line

(*) 3.6.2.3 Input Noise on + 28 Volt Line. Set up as shown in Figure 3. Monitor + 22 volts with the monitor unit DVM and scope. Monitor also the "+20V (P)" with scope use "CKT GR" for ground. Apply a 450 millivolt peak to peak sine wave signal in series with the +28 volt line as shown in Figure 3. Vary frequency from 10 Hz to 50 Hz. The +22 volts shall have less than 50 millivolts peak to peak induced noise present and the "+20 VP" test point shall have less than 5 millivolts peak to peak of induced noise. Record actual values of induced noise on Table 3.

3.6.2.4 Initial Conditions. Set the following initial conditions on the ML 347-1 Bench Test Equipment.

Control	Title	Position
Telemetry Signal	Switch	V1
	Mode	V3
	Bit Rate	64 KC
Impulse Command	Selector	WF Mode
Index Pulse	Selector	55.5
	Amplitude	6.0V ± 1.0V*
Instrument Power	On/Off	Off
	Voltage	+28.0 ± 0.5V
	Current Limit	150 MA
	Sync Amplitude	6 ± 1 V*
	Sync Frequency	2461 ± 23 Hz
Timing Signal	Amplitude .868 PPS	+ 7 ± 1 V*
	13.9 PPS	+ 7 ± 1 V*
	222 PPS	+ 7 ± 1 V*

* Monitor these voltages at the test points located directly below their respective controls.

3.6.2.5 Input power Set Up as shown in Figure 4. R1 = 1 ± 0.1 Ω, 2 watts. R1 shall be premeasured on a resistance bridge to a precision of ± 0.1 %. Measure the voltage across R1 with the external DVM 180 seconds after power is turned on. Calculate input current (I), and input power (P). Record and make calculation as shown in Table 4.

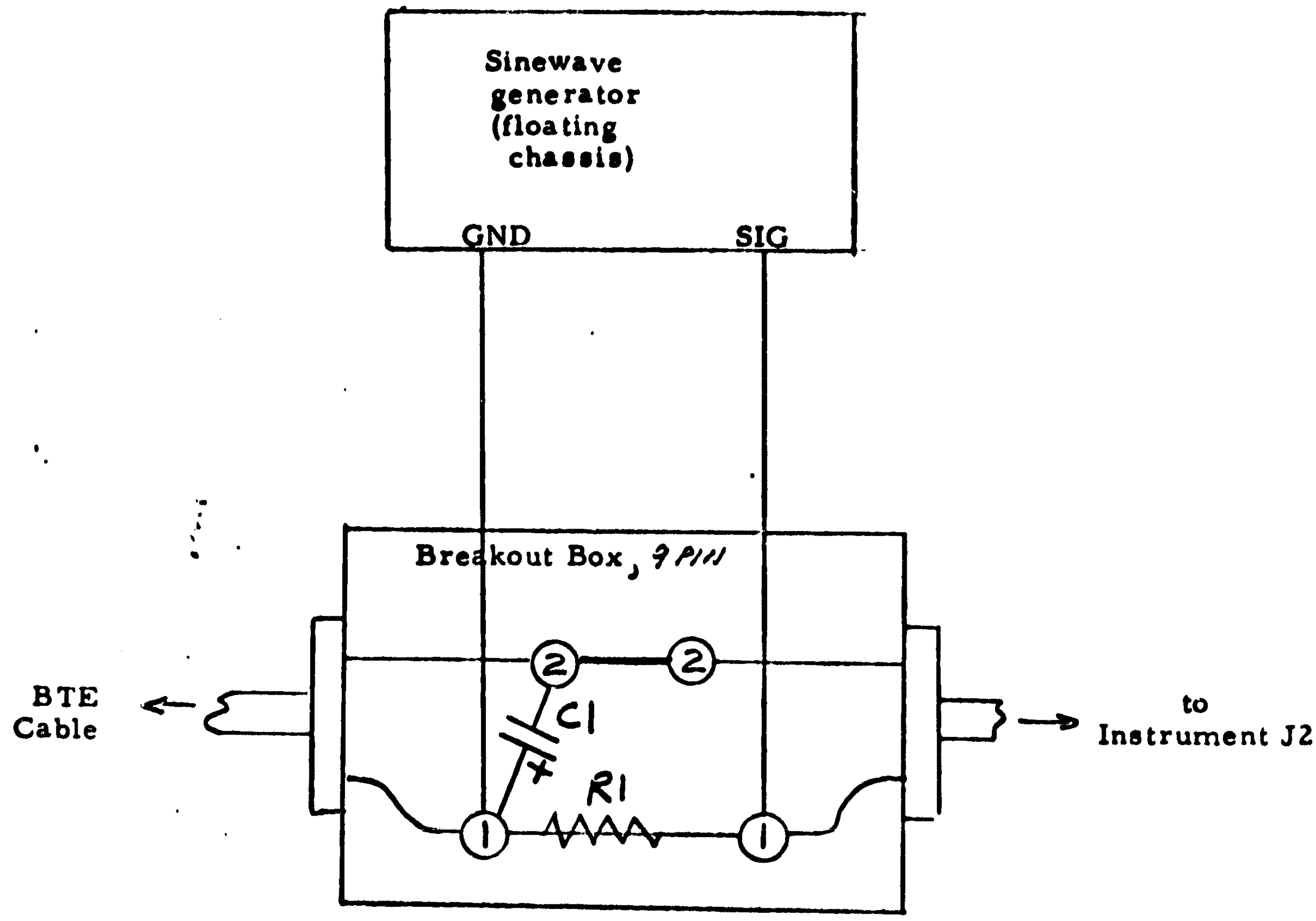

R1 = 5.1Ω, 1/4 watt or larger, ± 5%
C1 = 10μf, 35 volts
The remainder of setup is as shown in Figure 1
All pins not shown are jumpered straight through.

Figure 3
Noise On +28 Volt Line

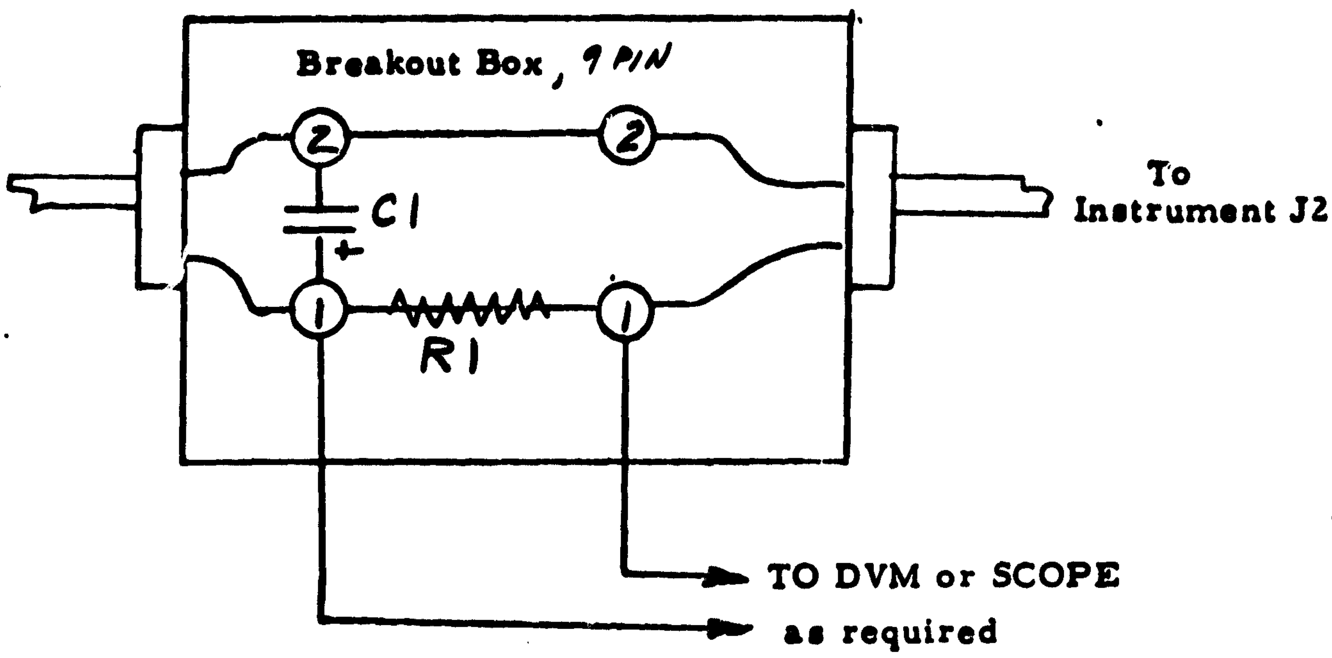

R1 = 1Ω, 1 watt or larger
C1 = 10µf, 35V
All pins not shown are jumpered straight through.
The remainder of setup is as shown in Figure 1.

Figure 4
Ripple Induced on +28 Volt Line and Input Power Measurement

(*) 3.6.2.6 Transient Turn-On Current. Set up as shown in Figure 5. Adjust scope so that when pushing the "single sweep" button, the output at "A gate" will energize the latching relay. Measure and record the voltage across R1 (and calculate I) for the time values listed in Table 5. Photograph turn-on transient and attach to Table 6.

3.6.2.7 Converter Frequency - Free Run. Set up as shown in Figure 1. Connect frequency counter (resolution at least 0.1 Hz) to "CONV" and "CONV RT" on monitor unit. Set sync control to Off on simulator unit. Measure and record in Table 6 the free run frequency.

3.6.2.8 Converter Frequency - Synchronized to Spacecraft. Set up as in 3.6.2.6. Set sync control on simulator unit to amplitude and frequency values (use scope and counter) listed in Table 6. Also determine the minimum sync amplitude required to sync to 2461 Hz.

(*) 3.6.2.9 Noise Fed Back to Spacecraft on Sync Lines. Set up as shown in Figure 6. Measure voltage across Pins 3 and 5 with scope from 1 Hz to 10 MHz. This voltage shall be less than 10 millivolts p-p. Measure for instrument free run condition. Record results in Table 7.

(*) 3.6.2.10 Noise Fed Back to Spacecraft on +28 Volt Line. Set up as shown in Figure 6, except measure the differential A.C. voltage between pins 1 & 2 of breakout box. This voltage shall be less than 20 millivolts p-p. Measure for instrument free run and for synced conditions. Record results in Table 7.

(*) 3.6.2.11 Power Supply Output Voltages. Set up as shown in Figure 1. Sync instrument to 2461 ± 25 Hz. Unless otherwise noted all of the following tests in this specification are to be made with the instrument synced. Measure and record the DC output voltages with the monitor unit DVM as indicated in Table 8. Set DVM select to VOLT TP and use Voltage Selector control to select required voltage.

RO 68-164

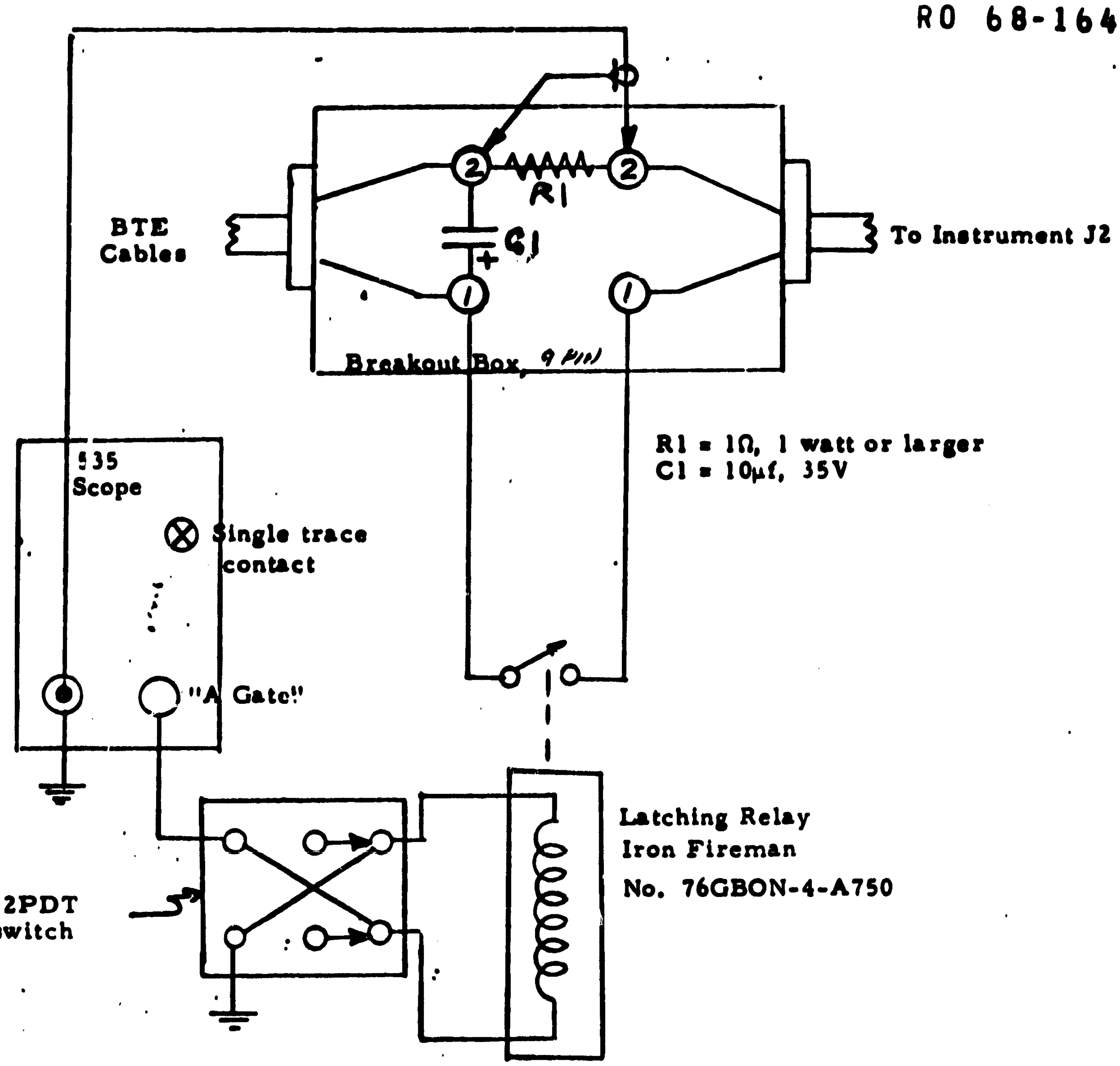

R1 = 1Ω, 1 watt or larger
C1 = 10μf, 35V

All pins not shown are jumpered straight through.
The remainder of test setup is as shown in Figure 1.

Figure 5
Transient Current at Turn On

M L · MARSHALL LABORATORIES TORRANCE CALIFORNIA	TITLE Main Body Electronics, ML337-1 OGO-F Triaxial S.C. Magnetometer Part No. 708100 Test Procedure fo	SPECIFICATION NO. S 46765	REV
CODE 38394		SHEET 10 OF	

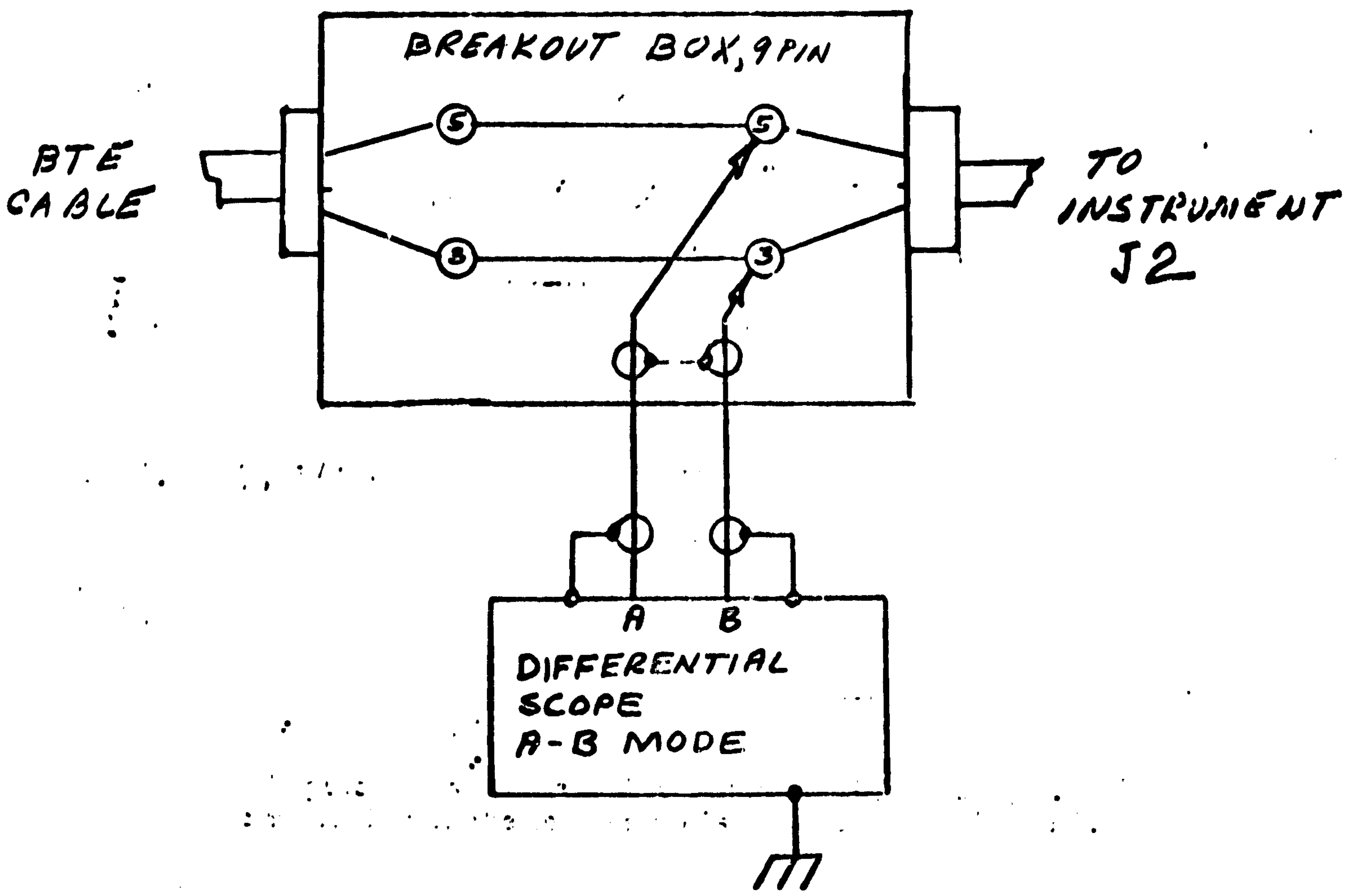

Figure 6
Noise Fed Back Into Sync Lines

3.6.3 **Logic.** Setup as shown in Figure 1 unless noted otherwise.

3.6.3.1 **Preset Condition at Power Turn-On.** Preset the BTE controls to condition outlined in paragraph 3.6.2.4. Turn instrument power off momentarily, then turn on. Monitor and record conditions as noted in Table 9.

3.6.3.2 **IFC Logic.** Measure and record data in Table 10. The IFC is now Off.

Set the Impulse Command to IFC press, the Initiate button once. The IFC is now On, the IFC status light shall indicate On. The IFC shall turn itself Off in 128 to 144 seconds after being turned on. Record on time. Watch may be used to measure time.

The IFC shall turn Off even though it is in the middle of its On operation when the Initiate button is pressed. Verify and record. Measure and record the On and Off levels with external DVM between test points "IFC S" and "CKT GR". Turn IFC On and monitor with scope the IFC signal at test point "IFC", use "X PA R" for scope ground. The waveform shall be shown in Figure 7. Attach strip chart recording of IFC to data package.

3.6.3.3 **Instrument Power Logic.** Measure and record instrument power status with DVM between test points "PWR S" and "CKT GR". Record on Table 11.

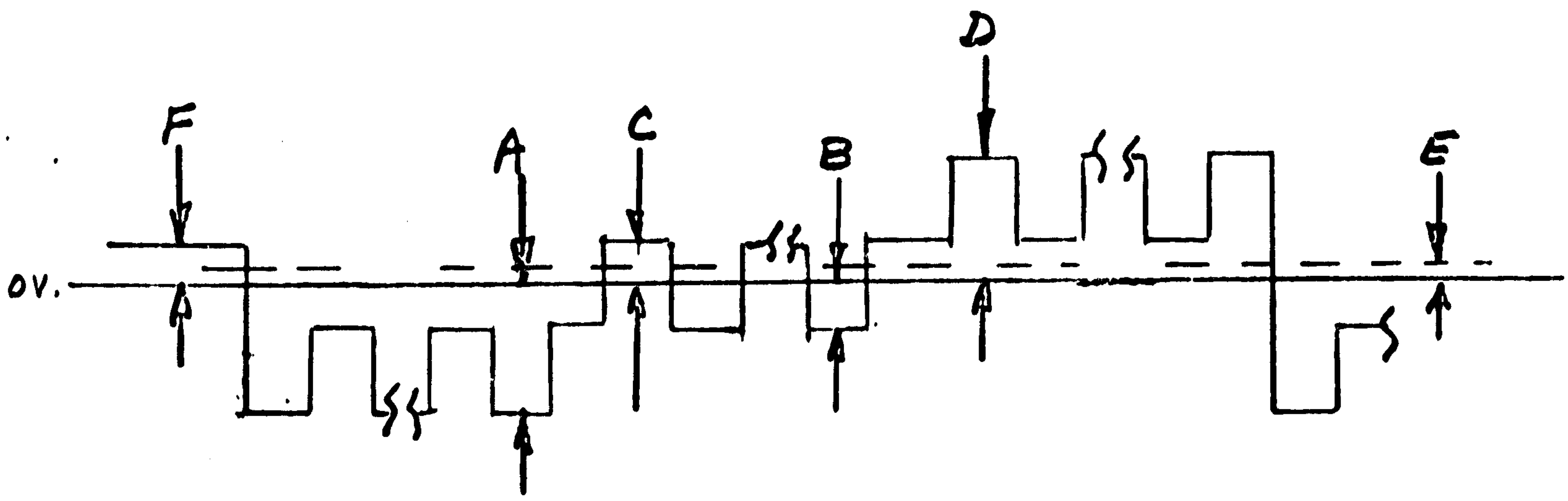

	IFC Output Waveform Voltages, millivolts.					
signal amplitude	A	B	C	D	E=DC component	F= off DC level
Low	1.48	0.42	1.67	0.1	0.1	+0.21 nominal
High	16.3	5.25	5.25	16.6	0.025	+0.35 maximum

Figure 7A
IFC Signal Waveform

RO 68-164

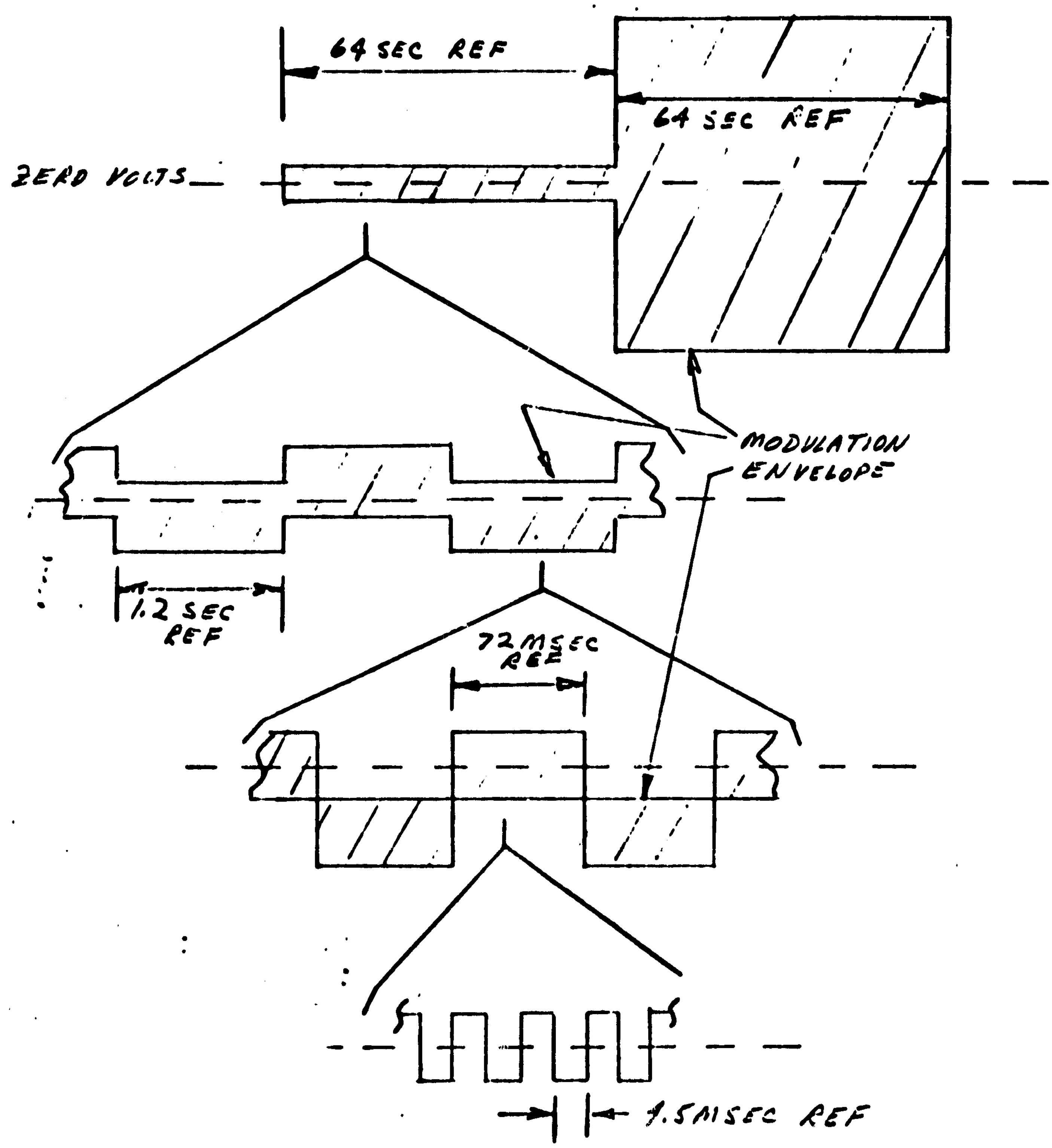

Figure 7B
IFC Signal Waveform

3.6.3.4 Spectrum Gain and Mode Logic. Measure and record in Table 12, the spectrum gain and mode status output with external DVM between test points "SP GM S" and "CKT GR".

Verify that the status indicator lights "SPEC COMM" and "SPEC GAIN" match the required status.

In commutate the spectrum gain shall continuously alternate between high and low, thus: high, low, high, low, etc. Each gain state is maintained for 8 seconds. Measure and record this period with the scope to within ± 0.5 seconds.

To change the mode condition set the Impulse Command to "WF MODE". Each time the Initiate button is pushed the mode shall change in the following sequences: commutate, noncommutate, commutate, noncommutate, etc. Verify the above sequence.

Return to the noncommutate mode. Tochange the gain condition, set the Impulse Command to "SPEC GAIN". Each time the Initiate button is pushed the gain shall change in the following sequence: high, low, high, low, etc. Verify this by pressing the button 5 or 6 times.

Verify that the spectrum gain always returns to the quiescent gain state (high or low) that it was in just prior to going into commutate. Check this for a quiescent high, then for a quiescent low gain state.

3.6.3.5 Waveform Gain and Mode Logic. Measure and record in Table 13, the waveform gain and mode status outputs with external DVM between tests points "WF GM S" and "CKT GR".

Verify that the Status Indicator lights "WF MODE" and "WF GAIN" match the required status.

To change the mode condition, set the Impulse Command to WF MODE. Each time the Initiate button is pushed the mode shall change in the following sequence: single, single, dual, dual, single, single, dual, dual, etc. Verify the above sequence.

Each waveform gain change command will change, in the single mode condition, the gain thus: high, low, high, low, etc.

Set the mode to single. Set Impulse Command to WF GAIN push the Initiate button 5 or 6 times to verify the above.

In the dual mode state, the gain command is inhibited, and gain is forced into the high gain state. Go to the dual mode and verify the above.

3.6.3.6 Spectrum Commutator Logic. Press index pulse push button repeatedly until the "10Hz" status indicator light turns on. Each successive push shall advance the commutator status thus: 10, 22, 47, 100, 216, 550, 1,000, 10, 22, etc.

Measure and record in Table 14 the spectrum commutator status output with an external DVM between test points "SP CH S" and "CKT GR".

Replace external DVM with a scope. Set the index Pulse Select first to 6.9, then to 13.9, and then to 55.5. Each waveform shall be a seven-level repeating staircase. Measure and record the period of the each staircases.

Inhibit Index Pulse. Set Index Pulse Selector to 6.9 and amplitude to 5V p-p. On the Monitor Unit connect a jumper between test points "IIP" and "CKT GR". This shall stop the stepping of the commutator status lights. Verify the operation of the Inhibit Index Pulse function by removing and replacing the jumper a number of times.

External Index Pulse. Inhibit regular Index Pulse by placing a jumper between "IIP" and "CKT GR". Inject an External Index Pulse test signal into "EIP" and "CKT GR" on the Monitor Unit. View the spectrum commutator Statue output with a scope ("SP CH C" and "CKT GR"). Set the pulse repetition frequency of the injected external index pulse first to 6.9, then to 13.9, and then to 55.5 PPS. In each case the status output waveform shall be a seven - level repeating staircase. Verify the above.

3.6.3.7 Waveform Bandwidth Logic. Measure and record in Table 15, the waveform bandwidth status output with an external DVM between test points "WF BW S" and "CKT GR". Verify that the status indicator lights WF BW Match the status. Set the telemetry signals controls as listed in the Table 15. Adjust the Impulse Command Initiate button and Select controls for single or dual waveform mode as required in the Table 15.

3.6.3.8 Threshold Levels - Spacecraft Logic Input Signals. Measure and record in Table 16 the threshold levels for each of the following spacecraft signals. Measure the signal amplitude with scope or DVM using the test point directly under the control on the simulator unit (Use simulator BTE Power GND).

The threshold levels for the Index Pulse can be found by noting the condition of the spectrum channel status indicator lights. When they start "stepping" and when they stop "stepping".

The threshold levels for the Timing Signals can be found by noting the condition of the IFC output signal measured at the "IFC" test point. Watch for a "drop-out" of the appropriate fourier component in the test signal as the threshold level for the given timing signal is reached.

The threshold level of the Telemetry Signals can be found by noting the condition of the Bandwidth Status signal measured at test point "WF BW S".

For the Switch Signal, set other controls as follows:

Bit Rate: 16K
Mode Signal: V3
W.F. Mode: Dual

Vary the amplitude of the Switch Signal until the waveform bandwidth indicator light changes from 4 to 8 and from 8 to 4. Record threshold values on Table 16.

For the Mode Signal, set other controls as follows:

Switch Signal: V1
Bit Rate: 64K
W. F. Mode: Single

Vary the amplitude of the Mode Signal until the waveform bandwidth indicator light changes from 8 to 64 and from 64 to 8.. Record threshold values on Table 6.

For the Bit Rate Signal, set other controls as follows:

Switch Signal: V1
Mode Signal: V3
W. F. Mode: Single

Vary the amplitude of the Bit Rate Signal until the waveform bandwidth indicator light changes from 8 to 16 and from 16 to 8. Record values on Table 16.

3.6.4 Waveform Channel. Set up as shown in Figure 1. Set SCO to Off. Inject all analog input signals simultaneously into the monitor unit test points "X PA", "Y PA", and "Z PA".

Measure and record the waveform channel gain, bandwidth, DC resting level, etc., with input signal level, frequency, waveform gain, and waveform mode as listed in Table 17.

3.6.5 Spectrum Channel. Set up as shown in Figure 1. Set SCO to Off. Inject input signals into monitor unit test points "X PA", "Y PA", or "Z PA". Set Index Pulse to 55.5 pps.

Measure and record the spectrum channel gains, center frequencies, output noise, and wideband subchannel gain as listed in Table 18.

When measuring the wideband subchannel use as output test points, "X WB", "Y WB", and "Z WB".

3.6.6 SCO. Set up as shown in Figure 1. Measure and record as indicated in Table 19A, the SCO output amplitude, and center frequency.

Measure output amplitude with a scope at test points "SCO" and "CKT GR".

Check center frequency of each SCO channel by measuring the output of each discriminator.

Measure and record modulation as indicated in Table 19B. Inject input signal at "X PA", "Y PA", or "Z PA" as required. Use "X PA R". "Y PA R", and "Z PA R" as grounds. Measure p-p outputs at rear of monitor unit on J4, J5 and J6 to a precision of 1%.

298

3.6.7 External IFC Input. Inject into test points "IFC IN" and "CKT GR" a 1 volt p-p 100 ± 10 Hz signal. Measure the output at test points "IFC" and "CKT GR". Record measured output in Table 20.

3.6.8 Sensor and Mainbody Tested as a System (Optional)

If a Sensor Preamplifier Assemblies are available, and time permitting, connect to mainbody assembly via BTE cables. Take test data as indicated in:

Table 5 (at -15°C Power shall be less than 4 watts); Tables 18D, 18E, and 18F (Required output noise at 4 Hz shall be less than 160 mv p-p in high gain and less than 20 mv p-p in low gain); Table 19C (noise output shall be less than 100, 150, 200, 250, 300, 350, and 400 mv for levels corresponding to frequencies between 10 to 1000 Hz.

4.0 QUALITY ASSURANCE PROVISIONS

The Requirements section of this specification shall form the Quality Assurance Provisions.

5.0 PREPARATION FOR DELIVERY

This section not applicable to this specification.

6.0 NOTES

6.1 If the unit under test, does not paas any of the above test criteria, notify the responsible engineer while set-up is still in tack.

PARTS DISPOSITION		SPEC NO.	REV
1. USE 2. REWORK	3. CANNOT BE REWORKED 4. RECORD 5.	S 46815	

REVISIONS

DISP	EFF	REV	DESCRIPTION	BY	CK	DATE	APPROVAL

RO 68-164

SPEC NO. S 46815 REV

SHEET INDEX	REV				
	SHEET	1	2	3	4
SHEET INDEX	REV				
	SHEET				

CONTRACT NO. 951630/7-080	
PREP L. Schotzenberger	12 July 1967
CK	
ENGR	13 July 67
APPD D. Chimbury	14 Jul 67
APPD	
QC APPD	8/1/67
DESIGN APPD	
CUSTOMER	

ML

MARSHALL LABORATORIES
TORRANCE, CALIFORNIA

TITLE

Environmental Test - OGO-F Triaxial S.C. Magnetometer, ML 337-1, Test Procedure for

SIZE	CODE IDENT NO.	SPECIFICATION NO.	REV
A	13126	S 46815	

RELEASED AUG 1 1967 | SHEET 1 OF 4

RD 68-164

1.0 SCOPE

1.1 Introduction

This procedure defines the vibration tests to be performed on the OGO-F Search Coil Magnetometer, ML337-1 (708100).

1.2 Purpose

The purpose of this test is to verify the instrument design and to quality proof the fabrication prior to delivery and subsequently insuring acceptance testing at the Goddard Space Flight Center

1.3 Test Requirements

The test procedures contained herein are in accordance with OGO Experiment Specification S-4-101 and JPL Specification 000-50562-DSN-A.

1.4 Applicable Documents

. Mechanical Interface Drawing 708002

2.0 WEIGHT

The weight of the instrument shall be determined to an accuracy of 0.1 pound or 5% total weight which ever is greater.

3.0 VIBRATION

3.1 Sinusoidal Swept Frequency

The applied frequency shall be swept from the lowest to the higest frequency once for each range. Time rate of change of frequency shall be proportional to frequency at the rate of 2 octaves/minute. (Total test time each axis: 3.8 minutes)

Axis	Frequency Range (cps)	Input Control (Stated)
Y-Y, X-X and Z-Z	10-16.5	0.5 in. constant disp. (D.A.)
	16.5-50	7 g (0 to peak)
	50-400	10 g (0 to peak)
	400-2000	12 g (0 to peak)

3.2 Allowable Tolerances

Amplitude ± 3 db

Frequency ± 2%

3.3 Special Instructions

3.3.1 Tester shall provide hold down attachments for instrument. See Figure 1 and Drawing 706002.

3.3.2 Mount test instrument to fixture using supplied Hexigon titanium bolt, No. 10-32 x 4-3/16, 4 places. Torque to 22 inch pounds.

3.4 Random Motion Vibration

Gaussian random vibration shall be applied with the "g-peaks" clipped at three times the root-mean-square acceleration specified in the schedule. With the experiment installed, the control accelerometer response shall be equalized such that the specified power spectral density (PSD) values are within ± 3 db throughtout the frequency band. The filter roll-off characteristic abbove 2000 cps shall be at a rate of 40 db/octave or greater.

Frequency Range (cps)	PSD Level (q^2/cps)	Acceleration (q-rms)
20-500	0.1	8.0 (for 20-2000 cps frequency range)
500-2000	0.1 with 12 db/octave roll off	

Total test time each axis: 4 minutes.

4.0 Marshall Laboratories will perform electrical tests per S46765 before and after vibration tests at Marshall Laboratories facilities.

5.0 Test Facility Responsibility and Requirements

The test facility shall provide the necessa' personnel, test and handling equipment to complete testing as o .lined in this procedure. In addition, a final vibration test report is required which shall include the name of the responsible engineer.

RO 68-164

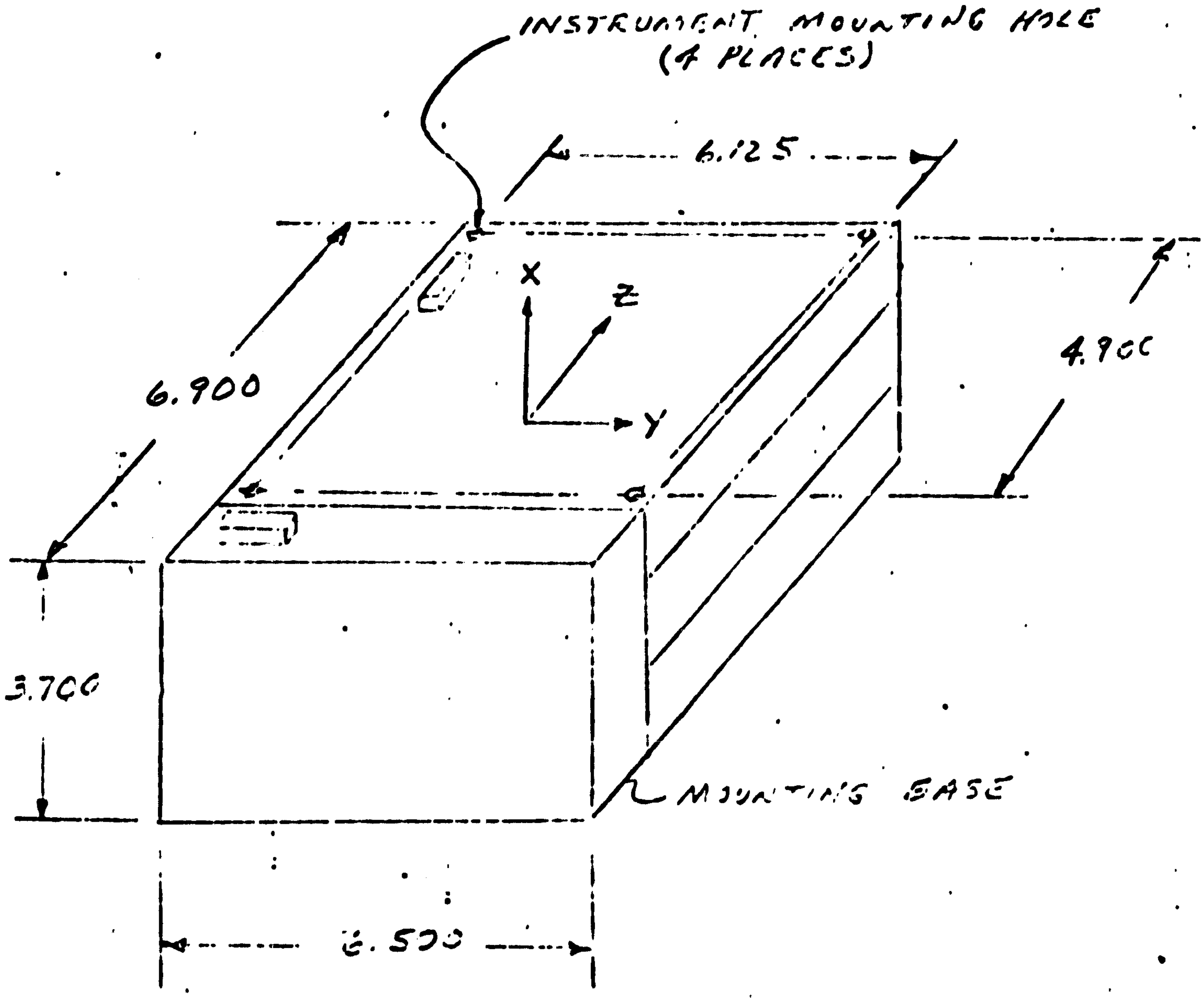

FIGURE 1
INSTRUMENT PACKAGE

ML MARSHALL LABORATORIES TORRANCE CALIFORNIA	TITLE OGO-F Triaxial S.C. Magnetometer ML 337-1 Specification for	SPECIFICATION NO. S 46815	REV
CODE 13126		SHEET 4 OF 4	283

PARTS DISPOSITION		SPEC NO.	REV
1. USE 2. REWORK	3. CANNOT BE REWORKED 4. RECORD 5.	S 46792	B

REVISIONS RO 68-164

DISP	EFF	REV	DESCRIPTION	BY	CK	DATE	APPROVAL
1	RCO	A	Revised battery polarity in Fig 3 Revised tolerance of 10.0 VRMS in para 3.6.1	RJN	RCE 7-6-67	6 July 67	AC DKP
4	1 Eup	B	1. 3.6.1 40HZ WAS 100 HZ, ADDED MV 2 PLACES 2. 3.6.3 1.00 VDC WAS 0.60 VDC	LFS	LFS	7/31/67	

REV B
SPEC NO. S 46792

SHEET INDEX	REV								
	SHEET								
SHEET INDEX	REV	B		B				A	
	SHEET	1	2	3	4	5	6	7	8

CONTRACT NO. 951630 / T-080	
PREP R. Entenmann	5-23-67
CK	
ENGR	
APPD	31 May 67
APPD	5/31/67
QC APPD	5/ /67
DESIGN APPD	
CUSTOMER	

M L **MARSHALL LABORATORIES**
TORRANCE, CALIFORNIA

TITLE
Performance Test Sensor Preamplifier Assy No. 708300 - Search Coil Magnetometer OGO-F-22 (ML-338)

SIZE	CODE IDENT NO.	SPECIFICATION NO.	REV
A	13126	S 46792	B

RELEASED JUN 1 1967 | SHEET 1 OF 8

264

1.0 SCOPE

This specification covers the electrical checkout of of the OGO "F" Search Coil Preamp & Sensor Assembly No. 708300.

2.0 APPLICABLE DOCUMENTS

2.1 The following documents, of the issue and revision in effect on the date of invitation for bids, form a part of this specification to the extent specified herein:

DRAWINGS

Marshall Laboratories

708300	Module Assembly Drawing
708300	Module Parts List
	All drawings specifying the electrical checkout of the titled module shall form a part of this specification.

2.2 Precedence of Governing Documents. Unless otherwise specified, when a requirement of an applicable specification is in conflict with a requirement specified herein, the requirement specified herein shall apply. When a requirement of an applicable drawing is in conflict with a requirement specified herein, the requirement specifi d on the drawing shall apply.

3.0 REQUIREMENTS

3.1 Acceptable results are contingent upon the use of the equipment and test procedures as specified herein. The test shall be performed in the exact order specified herein.

3.2 Standard Test Equipment. The following standard test equipment, OR EQUIVALENT, shall be used to check out the module:

A. Oscilloscope, Tektronix, Model 535A.

B. Plug-In Unit, Tektronix, Type CA.

C. Universal Counter, Computer Measurements, Model 729C.

D. Audio Oscillator, Hewlett-Packard, Model HP200CD.

E. Digital Voltmeter, Cubic, Model V-71.

F. Vacuum Tube Voltmeter, Hewlett-Packard, Model 400H.

G. Power Supply, Power Designs, Model 5005R.

H. Oscillo-Riter, Texas Instruments.

I. Temperature Chanber, Tenny TMUF 100240.

3.3 Special Test Equipment. The following special test equipment, not available commercially, shall be used to check out the assembly.

A. Subaudio Noise Amplifier (W7268-1 circuit)

B. One Hz Filter (SK52318)

C. Triaxial Fluxtank System

D. Calibration Coil, ML299-1.

3.4 Test Setup. As required in para. 3.6.

3.5 Use of ML Form 4-70. All test data shall be recorded in form ML 4-70.

3.6 Performance Test.

3.6.1 Amplifier Gain

Sensor coil input to Preamp Output. Remove shorting jumper from J2-J3. Connect as shown in Figure 1.

Signal is injected directly across sensor coil, J2 signal, J3 ground. The p-p voltage injected shall not exceed one volt.

Set signal frequency for 40 Hz adjust signal amplitude for 10.0mv ± 0.10mv VRMS at the preamp input. The value of the output signal shall be 1.010 ± 0.020 volts RMS. Record output voltage & gain. After measurement connect shorting jumper to J2-J3.

3.6.2 Heater

Measure current drain from the +20 VDC supply. The current shall be 2.0 ± 0.5 ma at +10°C, +25°C, and +60°C. The current shall be 11 ± 1 ma at 0°C and -50°C.

3.6.3 Output DC Offset Voltage

Measure DC offset voltage at the preamp output with IFC input grounded at -50°C, 0°C, +10°C, +25°C and +60°C. It shall be 0.00 ± 1.60 VDC.

3.6.4 Amplifier Gain Frequency Response

The IFC input is used for the signal input. Connect sensor assembly as shown in Figure 1. Adjust oscillator amplitude for constant 1.000 ± 0.005 VRMS at IFC input. Measure preamp output voltage for frequencies of 10, 100, 700, 1K, 1.85K, 2K, 5K, 10K, and 20KHz at -50°C, +25°C, and +60°C. At 100 Hz the value shall be 1.00 ± 0.02 VRMS at 1.85KHz the value shall be 0.70 ± 0.10 VRMS. At 20KHz the value shall be 0.12 ± 0.03 VRMS.

3.6.5 Output Signal Capability

Use the IFC input as in 3.6.4 with a preamp output load of 50K ohm in parallel with 0.1 µf. Set frequency to 1KHz.

RO 68-164

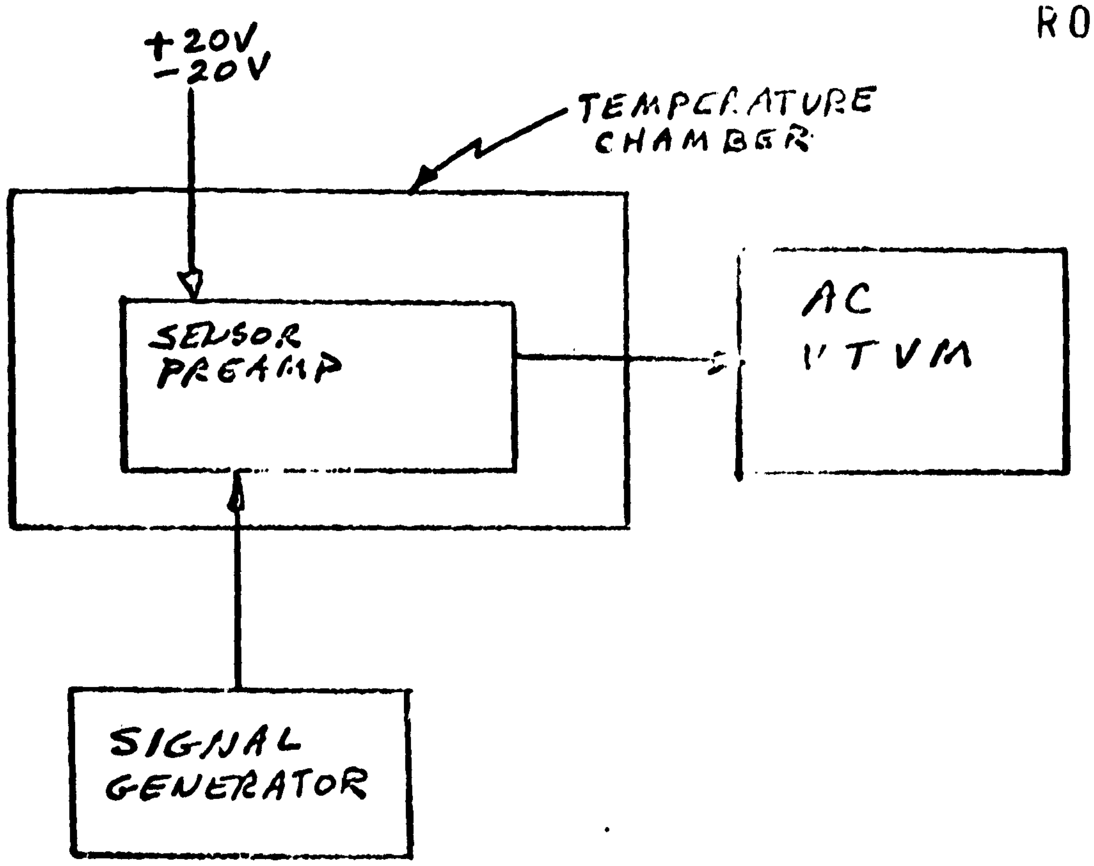

FIGURE 1

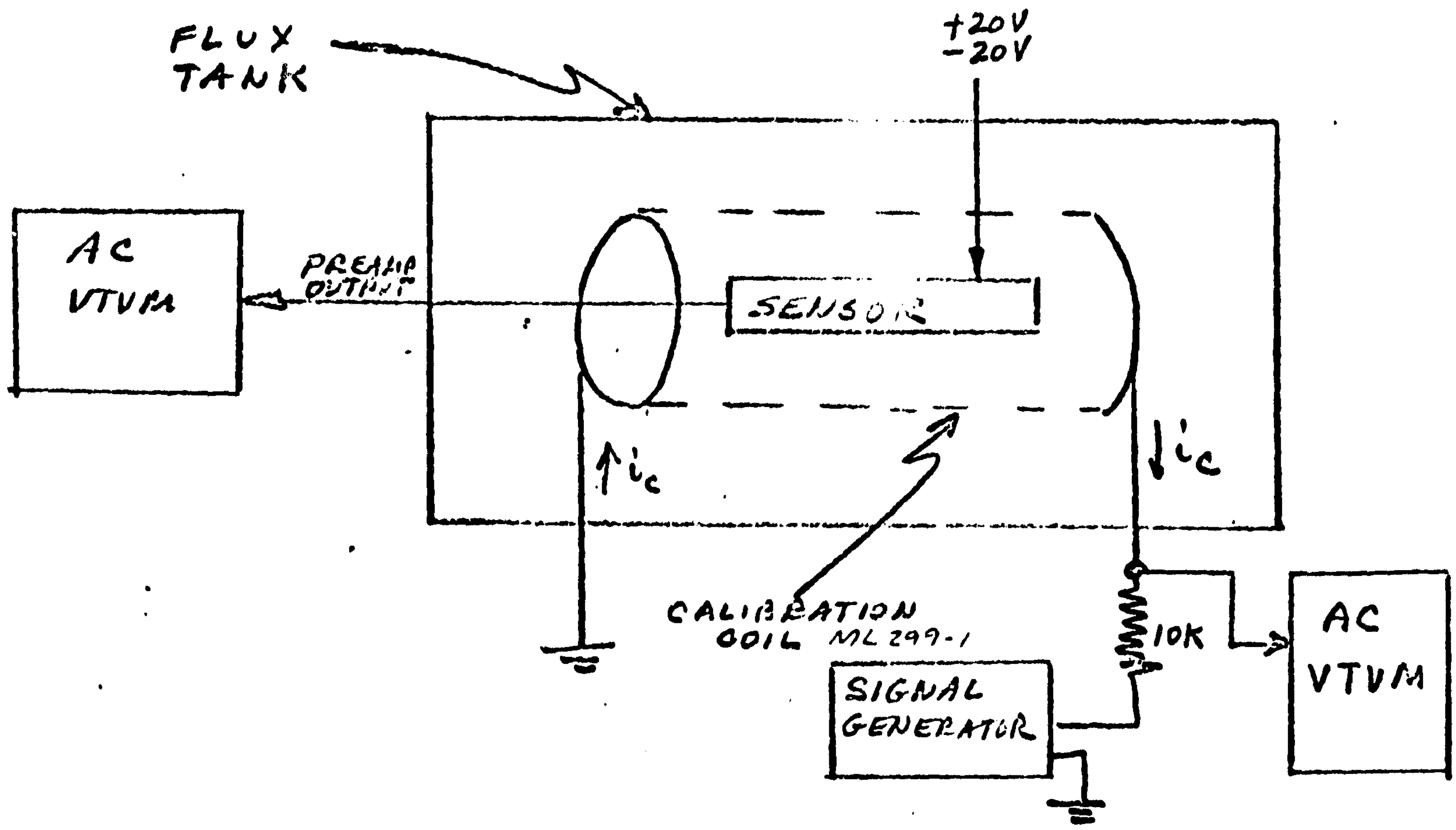

FIGURE 2

M L MARSHALL LABORATORIES TORRANCE CALIFORNIA	TITLE Performance Test Sensor Preamplifier Assy. No. 708300 - Search Coil Magn. OGO-F-22 (ML-338)	SPECIFICATION NO. S 46792	REV
CODE IDENT NO. 13126		SHEET 4 OF	

Measure the maximum undistorted output. This value shall be greater than 6.0 V p-p.

3.6.6 Sensor - Preamp Sensitivity Measurement

Use the Cylindrical Calibration Field Coil ML299-1 as a gamma source and connect as shown in Figure 2. Use a frequency of 100Hz. Measure Cylindrical Field Coil current for a sensor - preamp output (e_{sa}) of 1.00 ± 0.01 VRMS. Calculate Sensor Coil Sensitivity S. The sensitivity shall be 10.0 ± 0.3 microvolts per gamma Hertz.

$$\boxed{S = \frac{e_{sa}}{A_p (5.693)\, i\, f}}$$

S is derived thus:

$H = K i$ where K is the coil constant and i is the coil current
$K = 5.698\ \gamma/\mu a$

$e_s = \frac{d\phi}{dt} \simeq \frac{dh}{dt} \simeq Hf$, where e_s is the voltage at the output of the search coil.

$e_s = \frac{e_{sa}}{A_p}$ where e_{sa} is the output voltage of the preamp and A_p is the gain of the preamp as measured in para. 3.6.1.

thus $S = \frac{e_s}{Hf} = \frac{e_{sa}}{K\, i\, f\, A_p}$

$$S = \frac{e_{sa}}{A_p (5.693)\, i\, f}$$

3.6.7 Sensor - Preamp Frequency Response

Connect sensor as shown in Figure 2, but use regular excitation coils in tank instead of calibration coil. Record required input amplitude for a preamp output of 1 VRMS for frequencies from 10 Hz to 5KHz. Plot the resultant frequency response curve. The resonance frequency shall be 1,000 Hz ± 10%.

3.6.8 Sensor Coil D.C. Resistance

Remove Shorting jumper from J2 and J3. Connect as shown in Figure 3.

Adjust R1, decade box, for a D.C. null (0.0 ± 15 millivolts) at the scope. The value of R1 is equal to the value of the search coil resistance. Reconnect jumper from J2 to J3.

3.6.9 Low Frequency Noise

Bandwidth of measurement is from D.C. to 1 Hz.
Connect as shown in Figure 4.
Balance chart recorder as shown in Figure 4. Calibrate chart recorder in terms of preamp input noise. The full scale chart reading should be approximately 5 microvolts peak to peak.

Record noise for at least 10 minutes. The noise shall be less than 1.3 microvolts for frequency components down to 0.01 Hz. Select a representative chart segment (240 seconds) of this noise test for incorporation in this sensor's data file.
Record value of noise measured.

KO 68-164

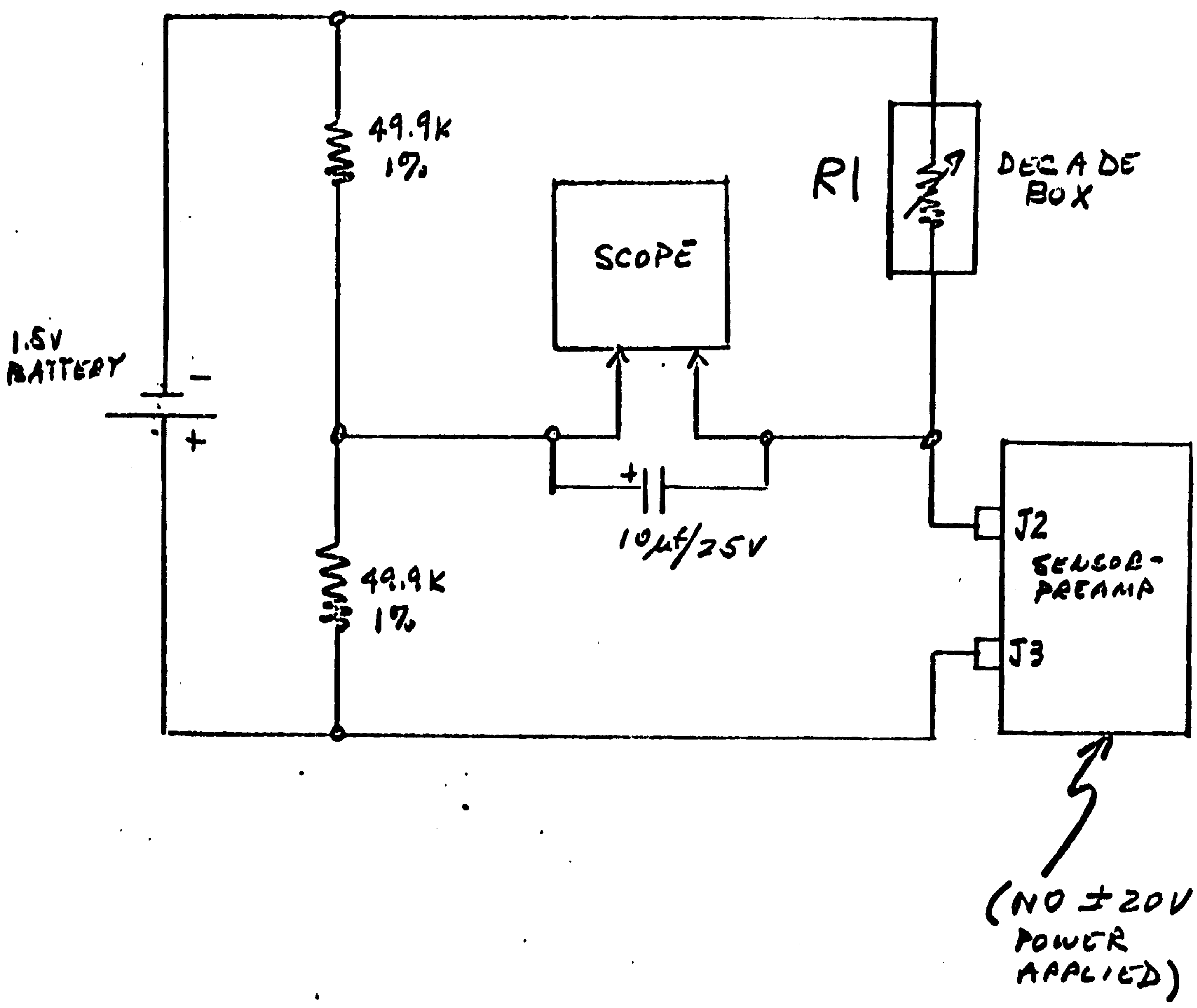

SEARCH COIL RESISTANCE

FIGURE 3

M L	MARSHALL LABORATORIES TORRANCE CALIFORNIA	TITLE Performance Test Sensor Pre-amplifier Assy. No. 708300 - Search Coil Magn. OGO-F-22	SPECIFICATION NO. S 46792	REV A
CODE				

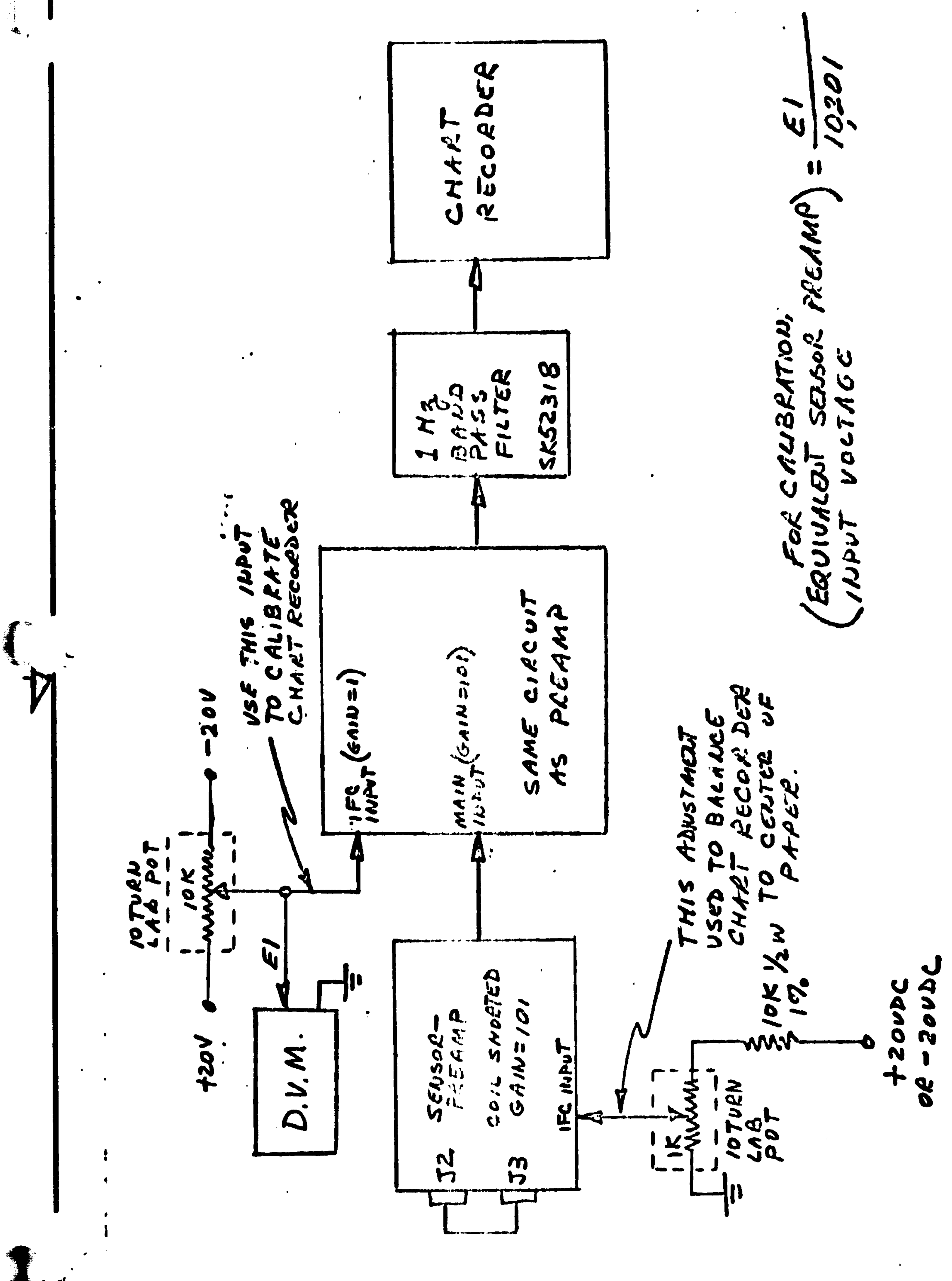

NOISE MEASUREMENT

FIGURE 4

M L	MARSHALL LABORATORIES TORRANCE CALIFORNIA	TITLE Performance Test Sensor Preamplifier Assy. No. 708300 - Search Coil Magn. OGO-F-22	SPECIFICATION NO. S 46792	REV
CODE	[illegible]			

291

APPENDIX E
VIBRATION RESULTS OF FLIGHT UNIT

TEST REPORT

REPORT NO. 49121

OUR JOB NO. 49121

YOUR P. O. NO. 22344

CONTRACT --

RO 68-164

WYLE LABORATORIES/ El Segundo, California • EA 2-1763 • OR 8-4251 • TWX 213-322 5415 • Cable WYLAB

MARSHALL LABORATORIES
3530 TORRANCE
TORRANCE, CALIFORNIA

13 PAGE REPORT

DATE SEPTEMBER 28, 1967

WEIGHT AND VIBRATION TESTS
ON
OGO-F TRIAXIAL S.C. MAGNETOMETER
PART NUMBER ML 337-1
SERIAL NUMBER 2
FOR
MARSHALL LABORATORIES

STATE OF CALIFORNIA
COUNTY OF LOS ANGELES } ss.

B. M. BLEAK, being duly sworn, deposes and says: That the information contained in this report is the result of complete and carefully conducted tests and is to the best of his knowledge true and correct in all respects.

B. M. Bleak

SUBSCRIBED and sworn to before me this 28 day of SEPTEMBER, 1967

Notary Public in and for the County of Los Angeles, State of California.

My Commission expires JULY 20, 1970

TEST BY ELECTRONICS DEPARTMENT

TEST WITNESS

QUALITY CONTROL APPROVAL

1.0 REFERENCES

1.1 MARSHALL LABORATORIES TEST SPECIFICATION S46815, DATED AUGUST 1, 1967, TITLED:

"ENVIRONMENTAL TEST - OGO-F TRIAXIAL S.C. MAGNETOMETER, ML 337-1, TEST PROCEDURE FOR"

1.2 MARSHALL LABORATORIES PURCHASE ORDER NUMBER 22344.

2.0 PROCEDURES AND RESULTS

2.1 WEIGHT TEST

2.1.1 THE WEIGHT OF THE INSTRUMENT WAS MEASURED USING A TRIPLE BEAM BALANCE UNIT WITH AN ACCURACY OF ±0.1 GM WYLE INSTRUMENT NO. W-6530.

2.1.2 THE WEIGHT OF THE SPECIMEN WAS 1971.5 GRAMS = 3.982 LBS.

2.2 VIBRATION TEST

2.2.1 THE SPECIMEN WAS SUBJECTED TO SINUSOIDAL AND RANDOM VIBRATION IN EACH OF THREE AXES AS OUTLINED BELOW:

1) SINUSOIDAL VIBRATION:

10-16.5 HZ	AT	0.5 IN. DOUBLE AMPLITUDE
16.5 - 50 HZ	AT	7.0 G PEAK
50 - 400 HZ	AT	10.0 G PEAK
400 - 2000 HZ	AT	12.0 G PEAK

AMPLITUDE ±3 DB
FREQUENCY ±2%

ONE SWEEP WAS PERFORMED FROM 10 TO 2000 HZ AT 2.0 OCT/MIN. IN EACH OF THE X, Y AND Z AXES.

2) RANDOM VIBRATION

20 - 500 HZ AT 0.1 G^2/HZ
500 - 2000 HZ AT -12 DB/OCT. DECAY
8.09 GRAMS

THE ABOVE TEST WAS PERFORMED 4.0 MINUTES IN EACH AXIS.

2.0 PROCEDURES AND RESULTS (CONTINUED)

2.2 VIBRATION TEST (CONTINUED)

2.2.2 THERE WAS NO EVIDENCE OF DAMAGE OR DETERIORATION AS A RESULT OF THE ABOVE TEST.

THE X Y Z PLOTS ARE INCLUDED HEREIN.

RESPONSIBLE ENGINEER - R. J. FANTASKE

WYLE LABORATORIES

DATA SHEET

RO 68-164

Test Title: WEIGHT

Customer MARSHALL LAB

Part No. ML-337-1

S/N 2

Spec. S 46815

Para. 2.0

Job. No. 49121

Date Test Started ~~8-15-67~~ 9-15-67

Date Test Completed ~~8-15-67~~ 9-15-67

Amb. Temp. ROOM

Photo NO

Test Med. NA

Specimen Temp. ROOM

Specimen OGO-F-TRIAXIAL

THE WEIGHT OF THE INSTRUMENT SHALL BE DETERMINED TO AN ACCURACY OF 0.1 POUND OR 5% TOTAL WEIGHT WHICH EVER IS GREATER.

THE WEIGHT OF THE INSTRUMENT WAS MEASURED USING A TRIPLE BEAM BALANCE UNIT WITH AN ACCURACY OF ± 0.1 gm. WYLE INSTR. NO. W-6530

SPECIMEN WEIGHT = 1971.5 GRAMS = 3.982 LBS

Specimen Meets Spec. Requirements YES ☐ NO ☐

Tested By AR Lasky

Witness

Date: 9-15-67

Sheet No. of

Q.C. Form Approval

246

WYLE LABORATORIES

DATA SHEET

RO 68-164

Test Title: VIBRATION

Customer	MARSHALL LABS.	Job. No.	49121
		Date Test Started	9/13/67
Part No.	ML 337-1	Date Test Completed	9/15/67
S/N	2	Amb. Temp.	70-73°F
Spec.	MLTS #46815	Photo	YES
Para.	3.0	Test Med.	N/A
		Specimen Temp.	Amb.

Specimen OGO-E TRIAXIAL S.C. MAGNETOMETER

SUBJECT THE SPECIMEN TO SINUSOIDAL AND RANDOM VIBRATION IN EACH OF THREE AXES AS OUTLINED BELOW:-

1.) SINUSOIDAL VIBRATION:-

10-16.5 Hz	@ 0.5" DA	AMPLITUDE ±3db	
16.5-50 HZ	@ 7.0 g pk		
50-400 HZ	@ 10.0 g pk	FREQ. ± 2%	
400-2000 HZ	@ 12.0 g pk		

PERFORM ONE SWEEP FROM 10 to 2000 HZ AT 2.0 OCT./MIN. IN EACH AXIS.

2.) RANDOM VIBRATION:-

$$\left.\begin{array}{ll} 20-500\,HZ & @\ 0.1\ g^2/HZ \\ 500-2000\,HZ & @\ -12\,db/OCT.\ DECAY \end{array}\right\}\ 8.07\ GRMS$$

DURATION:- 4.0 MINUTES PER AXIS

Tested By [signature]

Specimen Meets Spec. Requirements YES ☑ NO ☐

Witness ______ Date: ______

Sheet No 1 of 5

Approved [signature] Date: 9-20-67

W 614 A

247

WYLE LABORATORIES

DATA SHEET

RO 68-164

CUSTOMER MARSHALL LABS.
Test Title: VIBRATION
Specimen OED-F TRIAXIAL S.C. MAGNETOMETER
Part No. ML 337-1
Job No. 49121
S/N 2
Date 9/15/67

AXES DEFINITION:

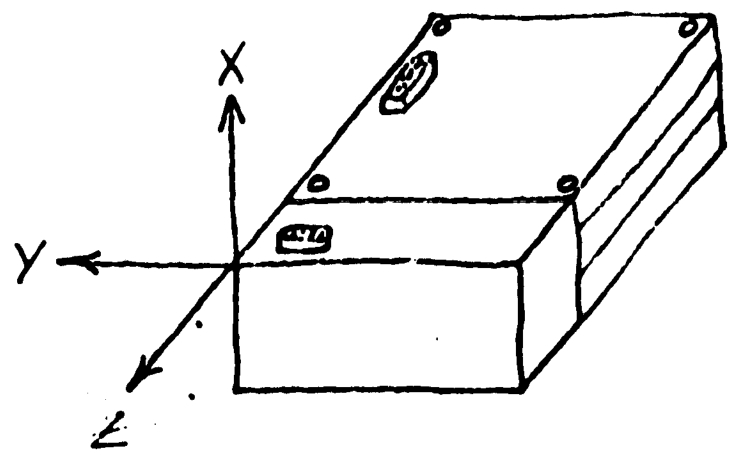

298

WYLE LABORATORIES

SPECIMEN OGO-F TRI[illegible]AL S.C. MAGNETOMETER JOB NO. 49121

CUSTOMER MARSHALL LABS. DATE 9-15-67

PART NO. ML 337-1 TEST BY [illegible]

S/N 2 WITNESS

TEST: VIBRATION

EQUIPMENT	MANUFACTURER	MODEL No.	SERIAL No.	RANGE	WYLE No.	CALIBRATION LAST	CALIBRATION DUE	ACCY
POWER AMP.	LING.	50/70	–	50 KVA	6374	N/A	N/A	N/A
VIBRATION EXCITER	LING.	335	–	15,000 lbs.-SINE	91280	N/A	N/A	N/A
SERVO	B & K	1018	–	5-10,000 HZ	3933	8/30/67	11/30/67	±1%
TIMER	STANDARD	–	–	1 HOUR	6857	9/10/67	10/10/67	±.1 SEC
RANDOM CONSOLE	LING	ASDE 80	–	85 CHANNEL	6812	N/A	N/A	N/A
CHARGE AMP.	UNHOLTZ-DICKIE	8PMCV.	–	1,000 g	L99972	5/24/67	11/24/67	±2% F.S.
ACCEL.	ENDEVCO	2272	NG62	1,000 g	30527	7/12/67	10/13/67	±5%
X-Y RECORDER	MOSELEY	135	–	8 X 11½ INCH	1058	8/5/67	11/5/67	±1% F.S.
VOLT METER	B & K	2416	–	1,000 VAC	6541	7/7/67	10/[illegible]/67	±[illegible]

PAGE #3 of 5

REPORT NO. 49121

8

RO 68-164

Job No. 45 1
Sheet 4 of 5
I D No. ML 337-1

DYNAMICS SECTION
VIBRATION TEST DATA SHEET
SINE SWEEPS

Date	Time	Axis	Temp (°F)	Sinusoidal Freq. (CPS)	Sinusoidal Disp. ("DA)	Sinusoidal Accel (±G)	Test Time Min	Comments	Name
		XYZ	Amb.	10-16.5	0.5	—	2 each axis	TEST REQUIREMENT	
				16.5-50	—	7.0		SWEEP FROM 10 to 2000 HZ.	
				50-400	—	10.0			
				400-2000	—	12.0			
9/15/67	1025	Z	Amb.	ABOVE LEVELS				S/N 2 - SWEEP COMPLETED WITH	
	1028						3'21"	NO APPARENT DAMAGE to SPECIMEN.	RB
9/15	1100	Y	Amb.	ABOVE LEVELS				S/N 2 - SWEEP COMPLETED WITH	
	1104						3'26"	NO APPARENT DAMAGE to SPECIMEN.	RB
9/15	1542	X	Amb.	ABOVE LEVELS				S/N 2 - SWEEP COMPLETED WITH	
	1546						3'40"	NO APPARENT DAMAGE to SPECIMEN.	RB

4589 Q. C. Form Approval

Signed: R Breen

Page 284

REPORT NO. 49121

PAGE NO. 9

RO 68-164

DYNAMICS SECTION
VIBRATION TEST DATA SHEET
RANDOM VIBRATION

JOB No. ~~15166~~ K.P. 9121
SHEET 5 OF 5
I D No. N-337-1

DATE	TIME	AXIS	TEMP (F)	RANDOM FREQ. (CPS)	RANDOM PSD (G^2/CPS)	RANDOM ACCEL (GRMS)	TEST TIME (MIN)	COMMENTS	NAME
		XYZ	Amb.	20-500	0.1	8.09	4	TEST REQUIREMENT	
				500-2000	-12 db/oct ROLL OFF			TOL: ± 3db	
9/15/67	1455	Z	Amb.	ABOVE LEVELS				S/N 2 - RUN COMPLETED WITH	
	1459					8.2	4	NO APPARENT DAMAGE to SPECIMEN.	JEA
9/15	1503	Y	Amb.	ABOVE LEVELS				S/N 2 - RUN COMPLETED WITH	
	1507					8.2	4	NO APPARENT DAMAGE to SPECIMEN.	JEA
9/15	1550	X	Amb.	ABOVE LEVELS				S/N 2 - RUN COMPLETED WITH	
	1554					8.2	4	NO APPARENT DAMAGE to SPECIMEN.	JEA

...03R Q. C. Form Approval ~~Part~~

SIGNED: R Buer

301

WYLE LABORATORIES

REPORT NO. 49121
PAGE NO. 10
RO 68-164

DATA SHEET

Customer MARSHALL LABS. Job No. 49121
Date 9/14/67

Specimen OGO-F TRIAXIAL S.C. MAGNETOMETER

RECEIVING INSPECTION

No. of Specimens Received: ONE

Record identification information exactly as it appears on the tag or specimen:

Manufacturer MARSHALL LABS.

Part numbers ML 337-1

How does identification information appear: (name plate, tag, painted, imprinted, etc.)

PAINTED

Serial Numbers:* 2

Examination: Visual, for evidence of damage, poor workmanship, or other defects, and completeness of identification.

Inspection Results: There was no visible evidence of damage to the specimens unless noted below.

*If additional space is required for serial numbers, use an additional page, or reference first functional test data sheet (if applicable).

Inspected By H Atchison
Sheet No. of
Approved R Brum Date: 9/20/67

W614

JOB NUMBER 49121 DATE 9/15/67

P/N ML 337-1 AXIS Z

S/N 2 TOTAL GRMS 8.2

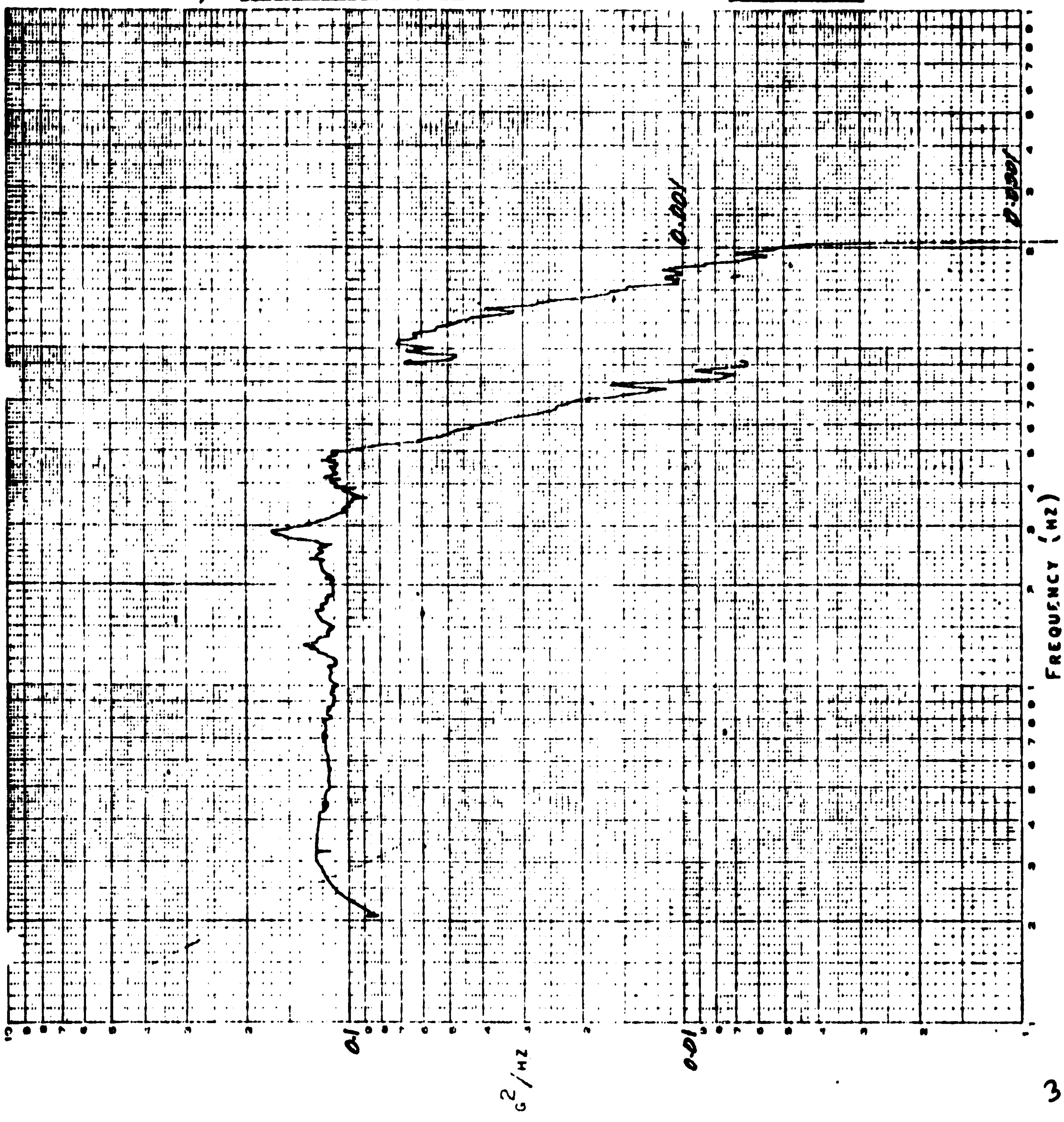

JOB NUMBER 49121 DATE 9/15/67

P/N ML337-1 AXIS Y

S/N 2 TOTAL GRMS 8.2

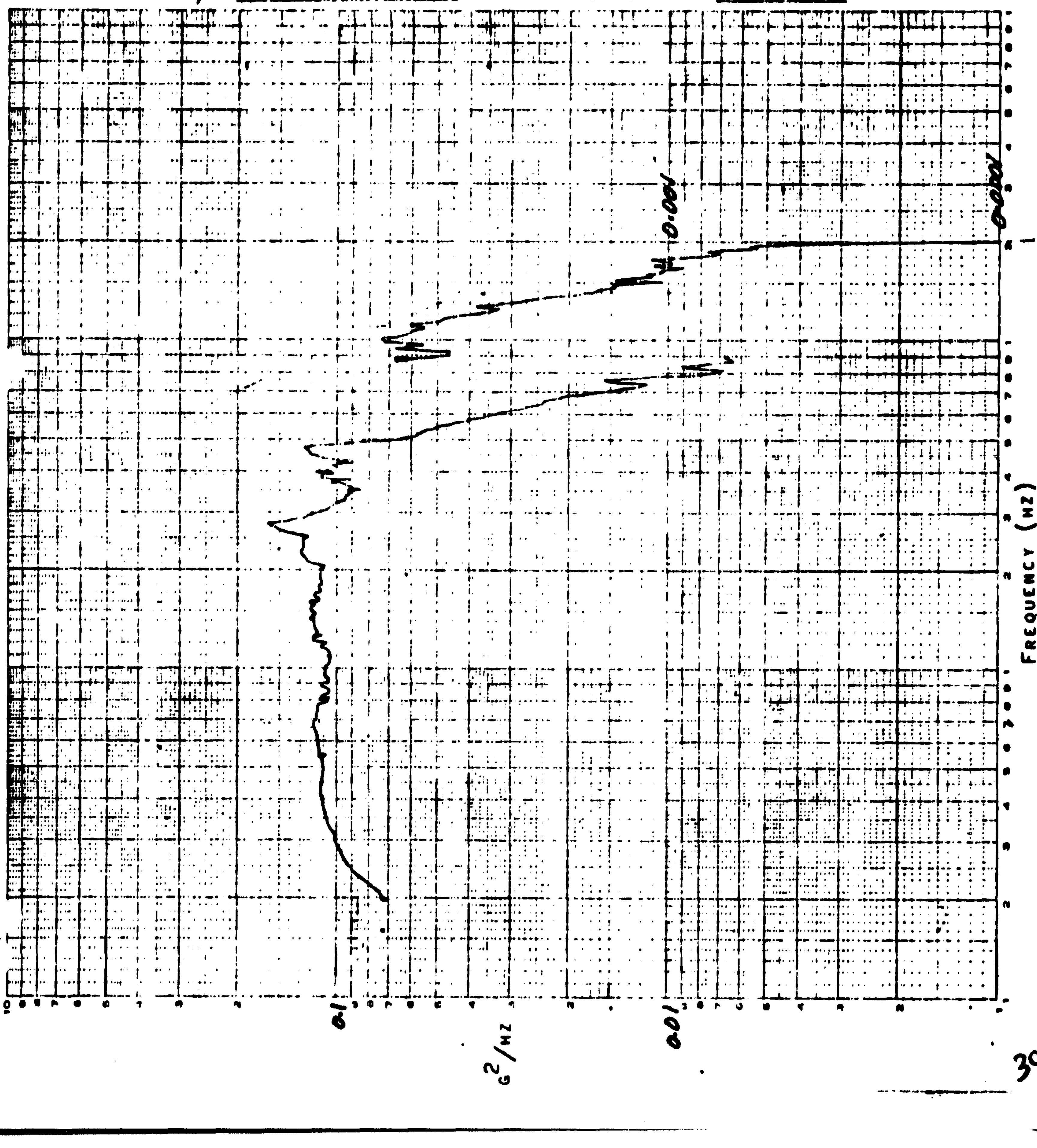

JOB NUMBER 49121 DATE 9/13/67

P/N ML 337-1 AXIS X

S/N 2 TOTAL GRMS 8.2

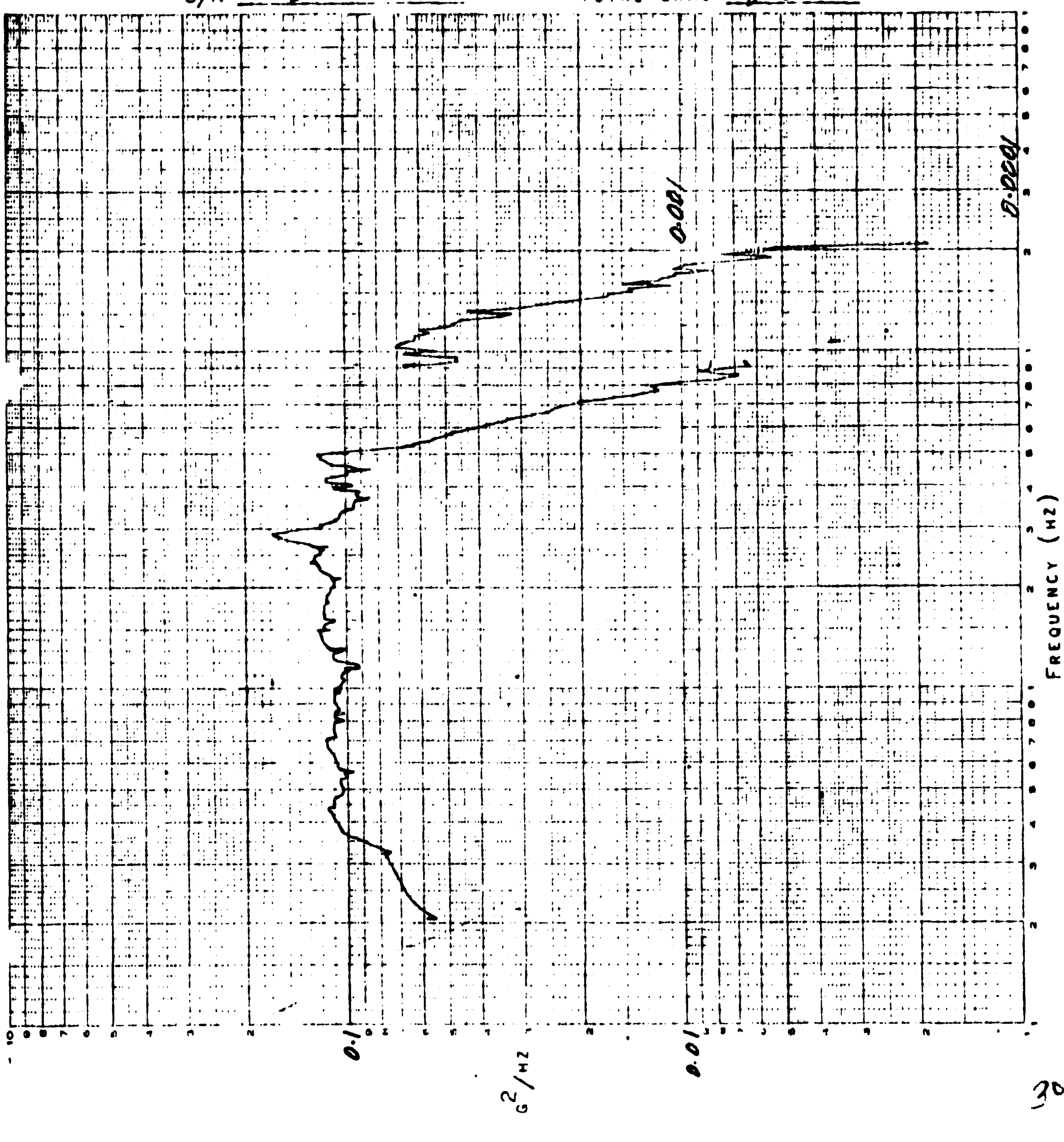

APPENDIX F
TEST RESULTS OF FLIGHT UNIT

PARTS DISPOSITION			
1. USE	3. CANNOT BE REWORKED	5.	Page 390
2. REWORK	4. RECORD		Form ML 4-21 (9-67)

RU 68-1

REVISIONS

DISP	EFF	REV	DESCRIPTION	BY	CK	DATE	APPROVAL
4	S/N 2 & up	A	Revised Tables 2, 8, 17G, 17H, 17I, 18H, 18I, 18J, and 19A.	RJN	RJN	19 Aug 67	RJN RC
4	S/N 2 & up	B	Revised tables 18A, 18B, 18C	RJN	RJN	1 Sept 67	RJN

ML 4-21 (9-67)

☐ Pre Foam

☐ Post Foam (Spot check only)

☐ Post Vibration

Witness D. W. Kraft

Tester RJN & D.B.

S/N 2

Weight 1967 grams

Date & Time Started 20 Sept 67 1430

Date & Time Finished 22 SEPT 1967 1020

Responsible Engineer R. J. Nebelsick

☒ Acceptance Test

SHEET INDEX	REV		B		A				A														A	A	A
	SHEET	C	1	2	3	4	5	6	7	8	9	10	11	12	13	14	15	16	17	18	19	20	21	22	23	24

SHEET INDEX	REV	B	B	B					A	A	A	A		
	SHEET	25	26	27	28	29	30	31	32	33	34	35	36	37

CONTRACT NO. 951630 / 7-080		
PREP Entenmann	11 Jul 67	
CK R. Entenmann	11 July 67	
ENGR R. J. Nebelsick	11 July 67	
APPD		
APPD		
QC APPD		
DESIGN APPD		
CUSTOMER		

M L — MARSHALL LABORATORIES, TORRANCE, CALIFORNIA

TITLE: MAIN BODY ELECTRONICS, ML 337-1
OGO-F-22 Triaxial S.C. Magnetometer
Part No. 708100 DATA SHEETS

SIZE	CODE IDENT NO.	
A	13126	Form ML 4-21 (9-67) B

RELEASED

MARSHALL LABORATORIES
A SUBSIDIARY OF MARSHALL INDUSTRIES

Main Body Electronics, ML 337-1
OGO-F Triaxial S.C. Magnetometer
Part No. 708100 Test Procedure
Serial Number 2
Date 20 Sept 67
RO 68-164
Data Sheets

Table 1
(3.6.1, Interface Impedance)
Use Triplet 630 VOM. Use X100 SCALE ONLY!

Measure between		Required Resistance	Measured Resistance +25°C	Remarks
J2-3	J2-5	4.8K Ω ± 10%	4.5k	Sync signal input
J2-3	J2-9	>10MΩ	∞	Sync signal to ckt gnd
J2-1	J1-24	≥10MΩ	∞	Power input to ckt gnd
J2-2	J1-24	>10MΩ	∞	Power return to ckt gnd
J1-24	J2-9	>10MΩ	∞	Ckt grd to chassis gnd
J2-9	J1-17	<1Ω	0Ω	Chassis gnd J2 to chassis gnd
J1-45	J1-24	>10KΩ	150k	Waveform gain command to gnd
J1-46	J1-24	>10KΩ	180k	Spectrum gain command to gnd
J1-47	J1-24	>10KΩ	180k	Mode command to gnd
J1-48	J1-24	>10KΩ	180k	SCO command to gnd
J1-49	J1-24	>10KΩ	180k	IFC command to gnd
J1-12	J1-24	>50KΩ	∞	Bit Rate Signal to gnd
J1-13	J1-24	>50KΩ	∞	Mode Signal to gnd
J1-14	J1-24	> 50KΩ	∞	Switch Signal to gnd
J1-16	J1-24	>22KΩ	∞	Index Pulse to gnd
J1-28	J1-24	20 ± 4KΩ	19k	222 PPS to gnd
J1-29	J1-24	20 ± 4KΩ	19k	13.88 PPS to gnd
J1-30	J1-24	20 ± 4KΩ	19k	0.868 PPS to gnd

MARSHALL LABORATORIES
A SUBSIDIARY OF MARSHALL INDUSTRIES

Main Body Electronics, ML 337-1
OGO-F Triaxial S.C. Magnetometer
Part No. 708100 Test Procedure
Serial Number 2
Date 20 Sept 68

Data Sheets RO 68-164

Table 2
(3.6.2.1 and 3.6.2.2 +28 Volt Power Input)

Set +28 Volts to	Measured value of +22 volts (± 10 mv)			Required value of +22 volts	Remarks
	-15°C	+25°C	+55°C		
+ 28V ± 10 mv	21.99	21.99	21.96	+ 22.00V ± 0.10V	
+ 22.5V ± 10 mv	21.99	21.99	21.96		
+ 33.5V ± 10 mv	21.99	21.99	21.97		
+ 42V ± 10 mv	21.99	21.99	21.97		Set for 10± 1 minutes only
+ 50 volt pulse 10ms long at 10Hz rate		40mv 20 ms			Record p-p value and recovery time.

Table 3
(3.6.2.3 Noise input to Power Supply)

Induced Noise

	Measured noise at +22 volts p-p (±5%)	Required value
	+25°C	
+22V	20 mv *	Less than 50 mv p-p
+20VP	10 mv *	Less than 5 mv p-p

* KNH

MARSHALL LABORATORIES A SUBSIDIARY OF MARSHALL INDUSTRIES	Main Body Electronics, ML 337-1 OGO-F Triaxial S.C. Magnetometer Part No. 708100 Test Procedure Serial Number 2 Date Sept 20 1967 Data Sheets RO 68-164

Table 4

(3.6.2.5 Input Power)

Measured ohmic value of R1 (to ±0.1%), R1 = 1.00Ω

	Measured value of V voltage across R1. DC (±1mv)	Calculate I $I = \frac{V}{R}$	Required I Less than	Calculate P P = (V) (I)	Required P (less than)
-15°C	.0770	77.0	72 ma	2.16	2 watts
+25°C	.0776	77.6 ma	72 ma	2.17	2 watts
+55°C	.0800	80.0	72 ma	2.24	2 watts

310

MARSHALL LABORATORIES
A SUBSIDIARY OF MARSHALL INDUSTRIES

Main Body Electronics, ML 337-1
OGO-F Triaxial S.C. Magnetometer
Part No. 708100 Test Procedure
Serial Number 2
Date 20 SEPT 1967 RO 68-164
Data Sheets

Table 5
(3.6.2.6 Transient Turn-On Current)

Time After Relay Closes in Millisecond (± 5%)	Measured voltage across R1 +25°C	Calculated current (V) (R) (± 5%)	Required Current (less than)
0.5	140 mv	140 ma	15 amps
2.0	100 mv	100 ma	12 amps
5.0	60 mv	60 ma	9 amps
200	14 mv	14 ma	6 amps
Steady State	77.6 mv	77.6 ma	3 amps

Photograph

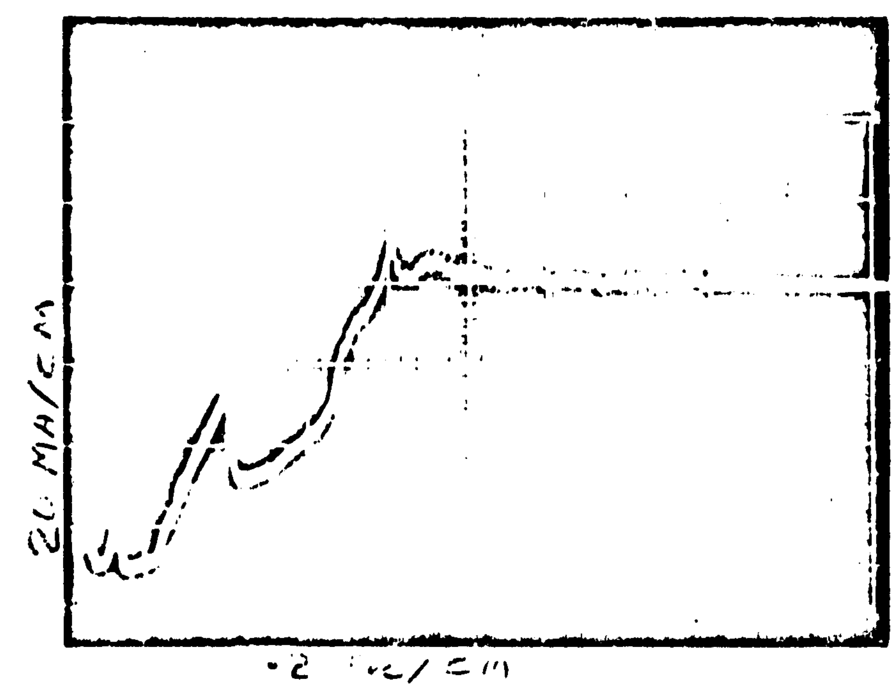

MARSHALL LABORATORIES
A SUBSIDIARY OF MARSHALL INDUSTRIES

Main Body Electronics, ML 337-1
OGO-F Triaxial S.C. Magnetometer
Part No. 708100 Test Procedure
Serial Number 2
Date 20 SEPT 1967
Data Sheets

RO 68-164

Table 6
(3.6.2.7, 3.6.2.8 Converter Frequency)

Set Simulator Controls to:		Measured Frequency at Converter Test Points (± 0.1 Hz)			Remarks
Sync Amplitude (± 0.1 volts)	Sync Frequency (± 0.1 Hz)	-15°C	+25°C	+55°C	
Off	NONE	2492	2509	2530	free run frequency shall be 2461±100 Hz
4.5	2461	2461	2461	2461	Shall be in sync
6.0	2461	2461	2461	2461	
8.0	2461	2461	2461	2461	
Threshold	2461	2.6	2.5V	2.4	Record Threshold

MARSHALL LABORATORIES
A SUBSIDIARY OF MARSHALL INDUSTRIES

Main Body Electronics, ML 337-1
OGO-F Triaxial S.C. Magnetometer
Part No. 708100 Test Procedure
Serial Number 2
Date 20 SEPT 1967
Data Sheets

Table 7
(3.6.2.9, 3.6.2.10, Noise Fed Back Into Spacecraft sync line)

	Measured Noise p-p +25°C	Required Noise less than (p-p)
Sync Line Free-Run	8.0mv	10 mv
Power Line Free-Run	20 mv	20 mv
Power Line Synced	20 mv	20 mv

Table 8
(3.6.2.11, Power Supply Output Voltages)

Voltage	Measured Values -15°C	+25°C	+55°C	Required Value
-20	-20.02	-20.02	-20.01	-20V ± 0.02V
-6	-5.989	-5.993	-5.995	-6V ± .01V
+2.5	+2.491	+2.497	+2.499	+2.5V ± 0.01V
+2.6	+2.686	+2.670	+2.653	+2.6V ± 0.15V
+4	+3.462	+3.623	+3.749	+3.8V ± 0.3V
+5	+4.930	+4.948	4.969	+5V ± 0.3V
+6	+5.996	+6.001	6.002	+6V ± 0.01V
+20(P)	+20.00	+20.00	+20.01	+20V ± 0.02V
+20(M)	+19.99	+19.99	+19.99	+20V ± 0.02V
+22	+21.98	+21.99	+21.95	+22V ± 0.1V

MARSHALL LABORATORIES
A SUBSIDIARY OF MARSHALL INDUSTRIES

Main Body Electronics, ML 337-1
OGO-F Triaxial S.C. Magnetometer
Part No. 708100 Test Procedure
Serial Number 2
Date 20 SEPT 1967

Data Sheets

Table 9

(3.6.3.1 Preset Conditions at Power Turn-On)

Status Indicator Lights	Measured at Turn-On			Required at Turn-On
	-15°C	+25°C	+55°C	
FC	off	OFF	off	Off
SCO	on	ON	on	On
Spectrum Commutate	Comm	COMM	Comm	Commutate
Waveform Mode	Dual	Dual	Dual	Dual
Waveform Bandwidth	32	32	32	32
Spectrum Channel	step	step	step	Stepping
Instrument Power	on	ON	on	On
Spectrum Gain	Hi	Hi	hi	High
Waveform Gain	Hi	Hi	hi	High

MARSHALL LABORATORIES
A SUBSIDIARY OF MARSHALL INDUSTRIES

Main Body Electronics, ML 337-1
OGO-F Triaxial S.C. Magnetometer
Part No. 708100 Test Procedure
Serial Number 2
Date 20 SEPT 1967
Data Sheets

Table 10

(3.6.3.2, IFC Logic)

Measured IFC Turn-Off Time			Required Time
-15oC	+25oC	+55oC	
132	138	143	128 to 144 seconds

IFC will turn off in middle of operation.

Check if yes

+15°C	+25°C	+55°C
✓	✓	✓

IFC Status	Measured IFC Status Output Levels			Required
	-15°C	+25°C	+55°C	
Off	.0392	.039V	.039	+0.1±0.3 VDC
On	+1.694	1.788	1.852	+2.0±0.3 VDC

IFC signal matches that shown in Figure 7.

Check if yes

-15°C	+25°C	+55°C
✓	✓	✓
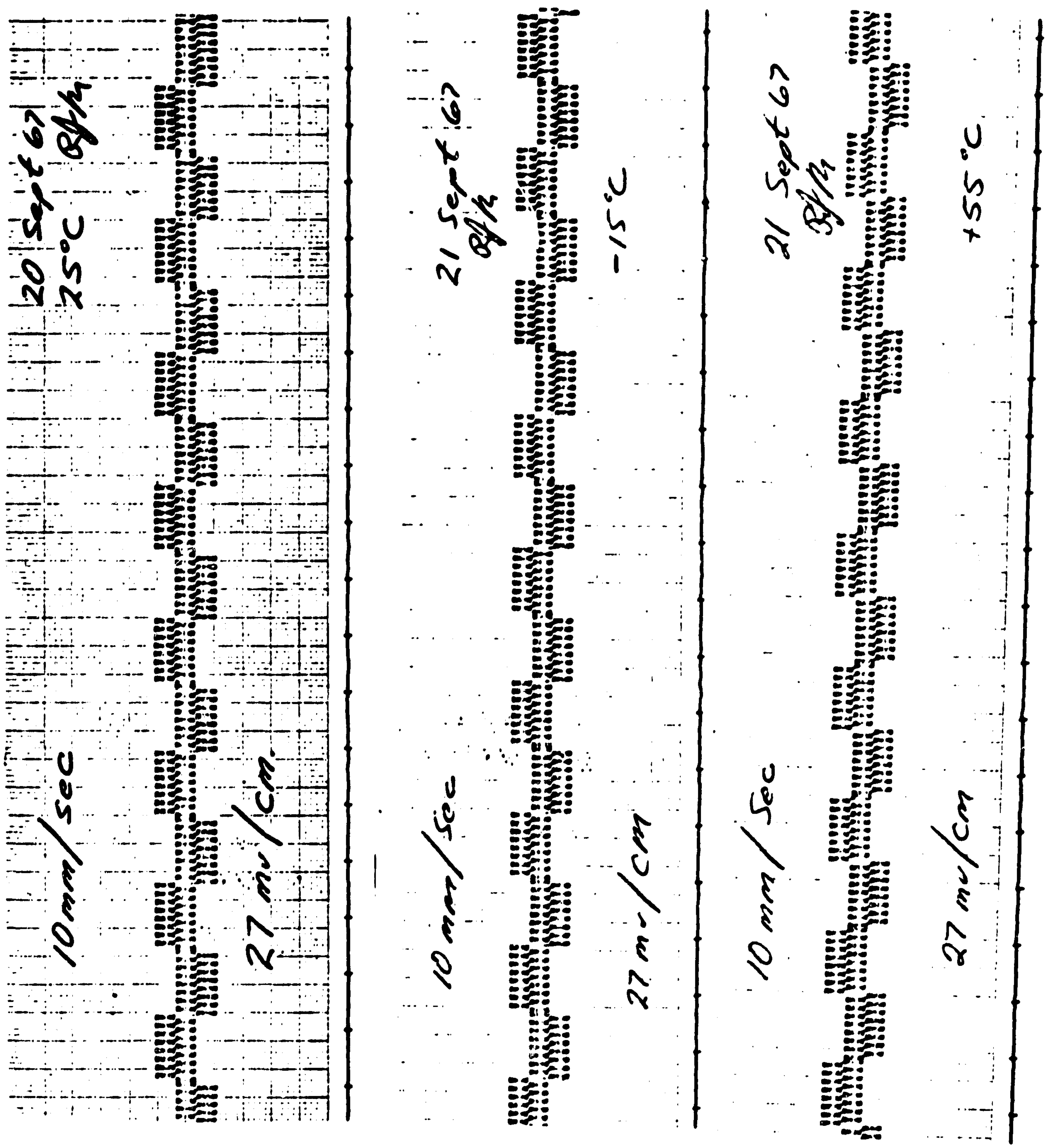

20 Sept 67
25°C
10mm/sec
27 mv/cm
21 Sept 67
-15°C
10 mm/Sec
27 mv/cm
21 Sept 67
+55°C
10 mm/Sec
27 mv/cm

MARSHALL LABORATORIES
A SUBSIDIARY OF MARSHALL INDUSTRIES

Main Body Electronics, ML 337-1
OGO-F Triaxial S.C. Magnetometer
Part No. 708100 Test Procedure
Serial Number 2
Date 20 Sept 67
Data Sheets

RJh

Table 11
(3.6.3.3, Instrument Power Status)

Instrument Status	Measured			Required
	-15°C	+25°C	+55°C	
Off	0.00	0.00	0.00	+0.1±0.3VDC
On	+2.159	2.151	2.146	+2.0±0.3VDC

317

MARSHALL LABORATORIES
A SUBSIDIARY OF MARSHALL INDUSTRIES

Main Body Electronics, ML 337-1
OGO-F Triaxial S.C. Magnetometer
Part No. 708100 Test Procedure
Serial Number 2
Date 20 Sept 62

Data Sheets RJL

Table 12

(3.6.3.4, Spectrum Gain & Mode Logic)

Condition	Measured Output -15°C	Measured Output +25°C	Measured Output +55°C	Required Output (±0.2V)
Low Gain/noncommutate	.1275	.1402	.1468	+0.1
Low Gain/commutate	.9294	.9821	1.019	+1.0
High/Gain/noncommutate	1.894	1.949	2.001	+2.0
High/Gain commutate	2.938	2.996	3.034	+3.0

Status lights "SPEC COMM" and "SPEC GAIN" match the above table. Check if yes.

-15°C	+25°C	+55°C
✓	✓	✓

Commutate	Measured Interval -15°C	Measured Interval +25°C	Measured Interval +55°C	Required Period
High	8.0	8.2	8.3	8±0.5 seconds
Low	8.0	8.1	8.3	8±0.5 seconds

Mode changes, when commanded to do so, in the following sequence: commutate, non-commutate, commutate, non-commutate, etc. Check if yes

-15°C	+25°C	+55°C
✓	✓	✓

Spec. Gain changes, when commanded to do so, in the following sequence: High, low, high, low, etc. Check if yes.

-15°C	+25°C	+55°C
✓	✓	✓

The gain returns to its quiescent state after commutate. Check if yes.

	-15°C	+25°C	+55°C
High	✓	✓	✓
Low	✓	✓	✓

MARSHALL LABORATORIES
A SUBSIDIARY OF MARSHALL INDUSTRIES

Main Body Electronics, ML 337-1
OGO-F Triaxial S.C. Magnetometer
Part No. 708100 Test Procedure
Serial Number 2
Date 20 Sept 68
Data Sheets RJk

Table 13
(3.6.3.5, Waveform Gain & Mode Logic)

Condition	Measured Output -15°C	+25°C	+55°C	Required Output (± 0.2V)
Low Gain/Single Mode	.1165	.1241	.1311	+ 0.1
High Gain/Single Mode	1.075	1.077	1.081	+ 1.0
High Gain/Dual Mode	2.862	2.957	3 026	+ 3.0

Status lights "WF MODE" and "WF GAIN" match the above table. Check if yes

-15°C	+25°C	+55°C
✓	✓	✓

Mode changes when commanded to do so in the following sequence:
Single, single, dual, dual, single, single, dual, dual, etc. Check if yes

-15°C	+25°C	+55°C
✓	✓	✓

Gain changes (when in single mode) when commanded to do so in the following sequence:
High, low, high, low, etc. Check if yes

-15°C	+25°C	+55°C
✓	✓	✓

Gain is forced into high when in dual mode and gain change command is inhibited.
Check if yes

-15°C	+25°C	+55°C
✓	✓	✓

MARSHALL LABORATORIES
A SUBSIDIARY OF MARSHALL INDUSTRIES

Main Body Electronics, ML 337-1
OGO-F Triaxial S.C. Magnetometer
Part No. 708100 Test Procedure
Serial Number 2
Date 20 Sept 62
Data Sheets

Table 14
(3.6.3.6 Spectrum Commutator Logic)

Spectrum Channel Status (Hz)	Measured Output -15°C	+25°C	+55°C	Required Output (±0.15V
10	.5389	.5516	.5669	+0.5V
22	.9584	.9928	1.024	+1.0
47	1.444	1.464	1.492	+1.5
100	1.820	1.914	1.984	+2.0
216	2.332	2.422	2.487	+2.5
550	2.895	2.977	3.040	+3.0
1000	3.647	3.643	3.659	+3.5

Status indicator lights match the above table.
Check if yes ✓

Index Pulse PPS	Measured Period (sec) -15°C	+25°C	+55°C	Required Period (seconds)
6.9	1.04	1.04	1.04	1.01 ± 10%
13.9	.508	.502	.504	0.504 ± 10%
55.5	.1285	.125	.13	0.126 ± 10%

Does the staircase waveform have seven equal (±5%) steps for each of the three above index pulse settings? Check if yes

-15°C	+25°C	+55°C
✓	✓	✓

MARSHALL LABORATORIES
A SUBSIDIARY OF MARSHALL INDUSTRIES

Main Body Electronics, ML 337-1
OGO-F Triaxial S.C. Magnetometer
Part No. 708100 Test Procedure
Serial Number 2
Date 20 Sept 67
Data Sheets

RJM

Table 15
(3.6.3.7, Waveform Bandwidth Logic)

Bit Rate Control	Switch Control	Mode Control	Record Transmit (for ref. only)	Waveform Mode	Bandwidth Condition	Measured Output -15°C	Measured Output +25°C	Measured Output +55°C	Required Output (±0.2V)
8K	V1	V4	R	D	4	.784	.814	.841	+0.8V
16	1	V4	R	D		.796	.826	.854	
64	1	V4	R	D		.796	.826	.853	
8	2	V3	R	D		.784	.814	.841	
16	2	V3	R	D		.796	.826	.854	
64	2	V3	R	D		.796	.826	.854	
8	1	V3	T	D		.796	.826	.855	
8	2	V4	T	D		.796	.827	.855	
8	1	V4	R	S	8	1.57	1.617	1.658	+1.6V
16	1	V4	R	S		1.57	1.619	1.658	
64	1	V4	R	S		1.57	1.619	1.656	
8	2	V3	R	S		1.57	1.619	1.655	
16	2	V3	R	S		1.57	1.619	1.655	
64	2	V3	R	S		1.57	1.619	1.658	
8	1	V3	T	S		1.57	1.618	1.651	
8	2	V4	T	S		1.57	1.618	1.657	
16	1	V3	T	D		1.57	1.612	1.657	
16	2	V4	T	D		1.57	1.612	1.657	
16	1	V3	T	S	16	2.36	2.425	2.479	+2.4V
16	2	V4	T	S		2.36	2.425	2.479	
64	1	V3	T	D	32	3.14	3.230	3.248	+3.2V
64	2	V4	T	D		3.14	3.231	3.249	
64	1	V3	T	S	64	3.95	4.072	4.158	+4.0V
64K	V2	V4	T	S		3.95	4.072	4.158	

Do status lights "WF BW" match the 25°C reading in the above table?

Check if yes ✓

321

MARSHALL LABORATORIES
A SUBSIDIARY OF MARSHALL INDUSTRIES

Main Body Electronics, ML 337-1
OGO-F Triaxial S.C. Magnetometer
Part No. 708100 Test Procedure
Serial Number 2
Date 20 Sept 68
RJK
Data Sheets

Table 16
(3.6.3.8 Threshold Levels)

Index Pulse	Threshold Measured (volts p-p) -15°C	+25°C	+55°C	Required (volts p-p)
6.9 PPS	3.2	2.9	2.9	between +1.3 and +5.0
13.9 PPS	3.2	2.9	2.9	between +1.3 and +5.0
55.5 PPS	3.2	2.9	2.9	between +1.3 and +5.0

Timing Signal	Threshold Measured (volts p-p) -15°C	+25°C	+55°C	Required (volts p-p)
222 PPS	3.15	2.8	2.9	between +1.5 and +4
13.9 PPS	3.1	2.8	2.9	between +1.5 and +4
0.868 PPS	3.2	2.8	3.0	between +1.5 and +4

Telemetry Signals	Threshold Measured (VDC) -15°C	+25°C	+55°C	Required VDC
Switch	3.21	2.991	2.829	between +0.5 and +6.75
Mode	3.28	3.039	2.870	between +0.5 and +6.75
Bit Rate (8KB to 16KB)	2.08	1.837	1.703	between +0.5 and +3.4
Bit Rate (16KB to 64KB)	5.47	5.230	5.058	between +4.4 and +6.75

MARSHALL LABORATORIES
A SUBSIDIARY OF MARSHALL INDUSTRIES

Main Body Electronics, ML 337-1
OGO-F Triaxial S.C. Magnetometer
Part No. 708100 Test Procedure
Serial Number 2
Date 20 Sept 62

Data Sheets

Table 17A
(3.6.4 X Waveform)

Bandwidth = 64
Mode = Single
Gain = High
Frequency = 400 ± 0.1 H_z
Input = 5.0 ± 0.1 MV p-p

	400 Hz Attenuator			
	Measured output			Required Output
	-15°C	+25°C	+55°C	
X Waveform A	20 mv	30 mv	25 mv	less than 50 MV p-p
X Waveform B	20 mv	30 mv	25 mv	less than 50 MV p-p
	160 ~	160 ~	60 ~ *	

Bandwidth = 64
Mode = Single
Gain = High
Frequency = 1.0 ± 0.1 Hz
Input = 50 ± 5 MV p-p
* (measure with scope)

	Maximum Output			
	Measured Output			
	-15°C	+25°C	+55°C	Required Output
X Waveform A	-.76 +6.5	-.70 +6.5	-.64 +6.45	-0.6 ± 0.2 to +6.6 ± 0.3
X Waveform B	-.73 +6.5	-.65 +6.5	-.58 +6.45	

MARSHALL LABORATORIES
A SUBSIDIARY OF MARSHALL INDUSTRIES

Main Body Electronics, ML 337-1
OGO-F Triaxial S.C. Magnetometer
Part No. 708100 Test Procedure
Serial Number 2
Date 20 Sept 62

Data Sheets gjh

Table 17 B
(3.6.4 Y Waveform)

Bandwidth = 64
Mode = Single
Gain = High
Frequency = 400 ± 0.1 Hz
Input = 5.0 ± 0.1 MV p-p
(measure with scope)

	400 Hz Attenuator			
	Measured Output			Required Output
	-15°C	+25°C	+55°C	
Y Waveform A	20mv	30mv	30mv	less than 50 MV p-p
Y Waveform B	20mv	30mv	30mv	less than 50 MV p-p
	↑60v	↑60v	↑60v	

Bandwidth = 64
Mode = Single
Gain = High
Frequency = 1.0 ± 0.1 Hz
Input = 50 ± 5 MV p-p
(measure with scope)

	Maximum Output			
	Measured Output			
	-15°C	+25°C	+55°C	Required Output
Y Waveform A	-.71 +6.4	-.61 +6.5	-.58 +6.48	-0.6 ± 0.2 to +6.6 ± 0.3
Y Waveform B	-.72 +6.5	-.65 +6.5	-.57 +6.45	

MARSHALL LABORATORIES
A SUBSIDIARY OF MARSHALL INDUSTRIES

Main Body Electronics, ML 337-1
OGO-F Triaxial S.C. Magnetometer
Part No. 708100 Test Procedure
Serial Number 2
Date 10 Sept 67
Data Sheets

Table 17C
(3.6.4 Z Waveform)

Bandwidth = 64
Mode = Single
Gain = High
Frequency = 400 ± 0.1 H_z
Input = 5.0 ± 0.1 MV p-p
(measure with scope)

	400 Hz Attenuator			
	Measured Output			Required Output
	-15°C	+25°C	+55°C	
Z Waveform A	20mv	40mv	30mv	less than 50 MV p-p
Y Waveform B	20mv	40mv	30mv	less than 50 MV p-p
	↑60mv	↑60mv	60mv↑	

Bandwidth = 64
Mode = Single
Gain = High
Frequency = 1.0 ± 0.1 Hz
Input = 50 ± 5 MV p-p
(measure with scope)

	Maximum Output			
	Measured Output			
	-15°C	+25°C	+55°C	Required Output
Z Waveform A	-.71 +6.6	-.65 +6.5	-.57 +6.45	-0.6 ± 0.2 to +6.6 ± 0.3
Z Waveform B	-.71 +6.6	-.65 +6.5	-.58 +6.43	

MARSHALL LABORATORIES
A SUBSIDIARY OF MARSHALL INDUSTRIES

Main Body Electronics, ML 337-1
OGO-F Triaxial S.C. Magnetometer
Part No. 708100 Test Procedure

Serial Number 2
Date 20 Sept 67
Data Sheets

RJh

Table 17D
(3.6.4 X Waveform)

All inputs shorted
All signal generators turned off
Mode = Dual or Single
Measure p-p noise output with scope, DC level with DVM

Noise output, input shorted

Bandwidth	Mode	Waveform Output	Gain	Measured DC			Req'd VDC	Measured AC			Req'd AC
				-15°C	+25°C	+55°C		-15°C	+25°C	+55°C	
4	D	A	H	2.48	2.44	2.45	2.5±0.1 Volts	4	2	3	≤20 mv p-p
4	D	B	H	2.48	2.48	2.49		1	1	1	
8	S	A	H	2.48	2.42	2.49		7	3	3	
8	S	B	H	2.47	2.42	2.49		5	3	3	
16	S	A	H	2.48	2.43	2.48		7	5	4	
16	S	B	H	2.47	2.43	2.49		5	5	4	
32	D	A	H	2.50	2.42	2.55		8	6	5	
32	D	B	H	2.48	2.48	2.47		4	1	1	
64	S	A	H	2.49	2.49	2.47		14	10	7	
64	S	B	H	2.48	2.49	2.47		14	10	7	

MARSHALL LABORATORIES
A SUBSIDIARY OF MARSHALL INDUSTRIES

Main Body Electronics, ML 337-1
OGO-F Triaxial S.C. Magnetometer
Part No. 708100 Test Procedure
Serial Number 2
Date 20 Sept 62
Data Sheets

Table 17E
(3.6.4 Y Waveform)

All inputs shorted
All signal generators turned off
Mode = Dual or Single
Measured p-p noise output with scope, DC level with DVM

Noise output, input shorted

Bandwidth	Mode	Waveform Output	Gain	Measured DC -15°C	Measured DC +25°C	Measured DC +55°C	Req'd VDC	Measured AC -15°C	Measured AC +25°C	Measured AC +55°C	Req'd AC
4	D	A	H	2.49	2.45	2.47	2.5±0.1 Volts	6	4	3	≤20 mv p-p
4	D	B	H	2.48	2.49	2.49		2	1	1	
8	S	A	H	2.48	2.43	2.50		10	5	3	
8	S	B	H	2.48	2.43	2.48		10	5	3	
16	S	A	H	2.48	2.42	2.50		10	7	4	
16	S	B	H	2.47	2.42	2.50		10	7	4	
32	D	A	H	2.47	2.45	2.55		14	8	6	
32	D	B	H	2.48	2.49	2.41		4	1	1	
64	S	A	H	2.48	2.49	2.48		16	14	8	
64	S	B	H	2.47	2.49	2.48		18	14	8	

MARSHALL LABORATORIES
A SUBSIDIARY OF MARSHALL INDUSTRIES

Main Body Electronics, ML 337-1
OGO-F Triaxial S. C. Magnetometer
Part No. 708100 Test Procedure
Serial Number 2
Date 20 Sept 67
Data Sheets

Table 17F
(3.6.4 Z Waveform)

All inputs shorted
All signal generators turned off
Mode = Dual or Single
Measure p-p noise output with scope, DC level with DVM

Noise output, input shorted

Bandwidth	Mode	Waveform Output	Gain	Measured DC -15°C	Measured DC +25°C	Measured DC +55°C	Req'd VDC	Measured AC -15°C	Measured AC +25°C	Measured AC +55°C	Req'd AC
4	D	A	H	2.49	2.45	2.47	2.5±0.1 Volts	6	3	3	≤20 mv p-p
4	D	B	H	2.48	2.48	2.50		2	1	1	
8	S	A	H	2.49	2.45	2.48		10	4	3	
8	S	B	H	2.48	2.44	2.50		8	4	3	
16	S	A	H	2.49	2.41	2.50		10	5	5	
16	S	B	H	2.49	2.41	2.51		10	5	5	
32	D	A	H	2.47	2.46	2.54		11	7	6	
32	D	B	H	2.48	2.48	2.50		5	1	1	
64	S	A	H	2.50	2.50	2.50		18	12	8	
64	S	B	H	2.49	2.49	2.50		18	12	8	

MARSHALL LABORATORIES
A SUBSIDIARY OF MARSHALL INDUSTRIES

Main Body Electronics ML 337-1
OGO-F Triaxial S. C. Magnetometer
Part No. 708100 Test Procedure
Serial Number 2
Date 20 Sept 67
Data Sheets

Table 17G

3.6.4 X Waveform

B. W.	Mode	out put	Freq. H_z	Req. Freq. ±20% -15°C	+25°C	+55°C	Measured e_o -15°C	+25°C	+55°C	Req'd e_o	Remarks
64	S	A	1.0±0.1				4.98	5.00	4.99	5.00±0.1	
4	D	A	0.5±0.1				4.90	4.90	4.90	5.00±0.1	
4	D	A	~4.0	4.0	4.0	4.0	2.5	2.5	2.5	2.5±0.05	upper freq. response
8	S	A	~8.0	8.0	7.7	8.0					
16	S	A	~16	15	15	15					
32	D	A	~32	31	31	30					
64	S	A	~64	61	60	59	2.5	2.5	2.5	2.5±0.05	upper freq. response
4	D	A	< .01	<.01	<.01	<.01	2.5	2.5	2.5	2.5±0.05	lower freq. response
64	S	B	1.0±0.1				4.98	5.0	5.0	5.00±0.1	

Input = 5mv ± 0.02 mv

Gain = High

MARSHALL LABORATORIES
A SUBSIDIARY OF MARSHALL INDUSTRIES

Main Body Electronics, ML 337-1
OGO-F Triaxial S.C. Magnetometer
Part No. 708100 Test Procedure
Serial Number 2
Date 20 Sept 67
Data Sheets RJM

Table 17H

3.6.4 Y Waveform

B. W.	Mode	out put	Freq. H_z	Req. freq. ±20% -15°C	Req. freq. ±20% +25°C	Req. freq. ±20% +55°C	Measured e_o -15°C	Measured e_o +25°C	Measured e_o +55°C	Req'd e_o	Remarks
64	S	A	1.0±0.1	\	\	\	4.98	4.98	5.00	5.00±0.1	
4	D	A	0.5±0.1	\	\	\	4.90	4.90	4.90	5.00±0.1	
4	D	A	~4.0	4.0	4.0	4.0	2.5	2.5	2.5	2.5±0.05	upper freq. response
8	S	A	~8.0	8.0	7.7	8.0					
16	S	A	~16	15	15	15					
32	D	A	~32	30	31	30					
64	S	A	~64	60	59	59	2.5	2.5	2.5	2.5±0.05	upper freq. response
4	D	A	< .01	<.01	<.01	<.01	2.5	2.5	2.5	2.5±0.05	lower freq. response
64	S	B	1.0±0.1	\	\	\	4.97	4.9	4.99	5.00±0.1	

Input = 5mv ± 0.02mv

Gain = High

MARSHALL LABORATORIES
A SUBSIDIARY OF MARSHALL INDUSTRIES

Main Body Electronics, ML 337-1
OGO-F Triaxial S.C. Magnetometer
Part No. 708100 Test Procedure
Serial Number 2
Date 20 Sept 67
Data Sheets

Table 171

3.6.4 Z Waveform

B.W.	Mode	out put	Freq. H_z	Req. Freq. ±20% -15°C	Req. Freq. ±20% +25°C	Req. Freq. ±20% +55°C	Measured e_o -15°C	Measured e_o +25°C	Measured e_o +55°C	Req'd e_o	Remarks
64	S	A	1.0±0.1				4.99	4.90	4.99	5.00 ± 0.1	
4	D	A	0.5±0.1				4.90	4.90	4.90	5.00 ± 0.1	
4	D	A	~ 4.0	4.0	4.0	4.0	2.5	2.5	2.5	2.5±0.05	upper freq. response
8	S	A	~ 8.0	8.2	8.0	8.1					
16	S	A	~ 16	15	15	15					
32	D	A	~ 32	30	31	29					
64	S	A	~ 64	61	60.5	60	2.5	2.5	2.5	2.5 ± 0.05	upper freq. response
4	D	A	< .01	<.01	<.01	<.01	2.5	2.5	2.5	2.5 ± 0.05	lower freq. response
64	S	B	1.0 ± 0.1				4.99	4.9	4.99	5.00 ± 0.1	

Input = 5mv ± 0.02mv

Gain = High

MARSHALL LABORATORIES
A SUBSIDIARY OF MARSHALL INDUSTRIES

Main Body Electronics, ML 337-1
OGO-F Triaxial S.C. Magnetometer
Part No. 708100 Test Procedure
Serial Number 2
Date 21 SEPT 1967

Data Sheets

Table 18A
(3.6.5 Spectrum Channel)

X axis

Gain	Measured center freq. -15°C	Measured center freq. +25°C	Measured center freq. +55°C	Require center freq. ± 10%	e_{in} p-p ± 1%	Measured e_o Peak DC -15°C	Measured e_o Peak DC +25°C	Measured e_o Peak DC +55°C	Req'd e_o ± 10%	Remarks
L	10.1	9.9	9.9	10	50mv	3.94	3.91	3.91	4.0	
L	22	21.8	21	22	50mv	3.96	3.92	3.88	4.0	
L	46	46.0	44	47	50mv	3.85	3.79	3.73	4.0	
L	100	99	99	100	50mv	3.95	3.92	3.87	4.0	
L	220	218	215	216	50mv	3.94	3.90	3.84	4.0	
L	559	560	562	550	50mv	3.98	3.99	3.99	4.0	
L	983	976	973	1000	50mv	4.14	4.21	4.19	4.5	
H	10.1	10	9.9	10	5mv	3.91	3.92	3.89	4.0	
H	22	21.6	21	22	5mv	3.91	3.94	3.88	4.0	
H	47	46	46	47	5mv	3.81	3.80	3.75	4.0	
H	100	100	99	100	5mv	3.96	3.95	3.84	4.0	
H	216	218	216	216	5mv	3.85	3.90	3.84	4.0	
H	555	558	557	550	5mv	3.96	4.04	4.06	4.0	
H	983	975	972	1000	5mv	4.16	4.24	4.22	4.5	

MARSHALL LABORATORIES
A SUBSIDIARY OF MARSHALL INDUSTRIES

Main Body Electronics, ML 337-1
OGO-F Triaxial S. C. Magnetometer
Part No. 708100 Test Procedure
Serial Number 2
Date 21 Sept 1967

Data Sheets

Table 18B

(3.6.5 Spectrum Channel)

Y axis

Gain	Measured center freq. -15°C	Measured center freq. +25°C	Measured center freq. +55°C	Req. center freq. ± 10%	e_{in} p-p ± 1%	Measured e_o Peak DC -15°C	Measured e_o Peak DC +25°C	Measured e_o Peak DC +55°C	Req'd e_o ±10%	Remarks
L	10.0	9.8	9.8	10	50mv	3.99	3.93	3.92	4.0	
L	22	21.6	21	22	50mv	3.96	3.92	3.88	4.0	
L	48	47	46	47	50mv	3.94	3.92	3.84	4.0	
L	100	99	98	100	50mv	3.98	3.98	3.97	4.0	
L	220	219	216	216	50mv	3.92	3.90	3.85	4.0	
L	557	555	556	550	50mv	3.96	3.96	3.92	4.0	
L	1012	1009	1004	1000	50mv	4.32	4.39	4.36	4.5	
H	10.0	9.9	9.9	10	5mv	3.96	3.93	3.91	4.0	
H	22	21.6	21	22	5mv	3.89	3.93	3.87	4.0	
H	48	47	47	47	5mv	3.90	3.90	3.83	4.0	
H	100	100	99	100	5mv	3.97	3.98	3.94	4.0	
H	219	219	217	216	5mv	3.92	3.90	3.86	4.0	
H	556	556	556	550	5mv	3.95	3.95	3.93	4.0	
H	1013	1009	1002	1000	5mv	4.30	4.39	4.36	4.5	

Page 314

MARSHALL LABORATORIES

A SUBSIDIARY OF MARSHALL INDUSTRIES

Main Bod Electronics, ML 337-1
OGO-F Triaxial S.C. Magnetometer
Part No. 708100 Test Procedure
Serial Number 2 RO 68-164
Date 21 SEPT 1967

Data Sheets

Table 18C

(3.6.5 Spectrum Channel)

Z axis

Gain	Measured center freq. -15°C	Measured center freq. +25°C	Measured center freq. +55°C	Require center freq. ± 10%	e_{in} p-p ± 1%	kMeasured Peak DC e_o -15°C	kMeasured Peak DC e_o +25°C	kMeasured Peak DC e_o +55°C	Req'd e_o ±10%	Remarks
L	10.1	10	7.9	10	50mv	3.94	3.85	3.83	4.0	
L	23	22.4	22	22	50mv	4.0	3.93	3.88	4.0	
L	44	46.0	46	47	50mv	3.91	3.86	3.78	4.0	
L	99	99	97	100	50mv	3.88	3.96	3.94	4.0	
L	219	217	214	216	50mv	3.91	3.90	3.85	4.0	
L	554	555	555	550	50mv	3.99	3.99	3.95	4.0	
L	999	993	984	1000	50mv	4.41	4.46	4.42	4.5	
H	10.0	10	9.9	10	5mv	3.87	3.83	3.80	4.0	
H	23	225	22	22	5mv	3.91	3.92	3.85	4.0	
H	47	46.0	46	47	5mv	3.87	3.84	3.75	4.0	
H	99	99	98	100	5mv	3.86	3.93	3.90	4.0	
H	217	217	215	216	5mv	3.87	3.87	3.84	4.0	
H	553	555	554	550	5mv	3.96	3.97	3.95	4.0	
H	999	992	991	1000	5mv	4.40	4.45	4.41	4.5	

MARSHALL LABORATORIES
A SUBSIDIARY OF MARSHALL INDUSTRIES

Main Body Electronics, ML 337-1
OGO-F Triaxial S.C. Magnetometer
Part No. 708100 Test Procedure
Serial Number 2
Date 21 SEPT 1967 RO 68-164

Data Sheets

Table 18D
(3.6.5 Spectrum Channel)

Gain = High

Noise output
All inputs shorted
Mode = Noncommutate
Measure seven level staircase on scope
Index Pulse = 55.5 pps

	Axis	Center Frequency	Measured Output peak D-C			Required Noise Output
			-15°C	+25°C	+55°C	
X	x	10	4	4	3	< 20mv
	x	22	4	4	4	
	x	47	4	5	15	
	x	100	6	10	15	
	x	216	8	15	25	
	x	550	22	25	29	
	x	1000	10	18	22	
Y	y	10	2	5	4	
	y	22	5	5	4	
	y	47	3	5	12	
	y	100	9	8	7	
	y	216	11	14	20	
	y	550	23	30	25	
	y	1000	9	15	16	
Z	z	10	6	5	4	
	z	22	6	5	2	
	z	47	4	8	12	
	z	100	5	10	11	
	z	216	24	20	27	
	z	550	43	40	46	
	z	1000	22	20	24	

MARSHALL LABORATORIES
A SUBSIDIARY OF MARSHALL INDUSTRIES

Main Body Electronics, ML 337-1
OGO-F Triaxial S.C. Magnetometer
Part No. 708100 Test Procedure
Serial Number 2
Date 21 Sept 1967 RQ 68-164
Data Sh

Table 18E

(3.6.5, Spectrum Channel)

Spectrum Frequency Response, X axis, +25°C.

Mode - Noncommutate

Measure seven level staircase with DVM and record the "step" channel voltage for each input frequency.

Index pulse = Manual
Gain = low
Set input such that output at 100 Hz = +4.0 ± 0.1 volts, e_{IN} = 50 mV p-p

Frequency (Hz ± 1%)	Measured Channel Output Voltage (± 5%)						
	10	22	47	100	216	550	1000
6.8	.888	.215	.062	.026	.011	.006	.005
10	3.90	.420	.117	.040	.016	.008	.005
15	.863	.980	.219	.071	.026	.011	.006
22	.403	3.86	.430	.125	.042	.015	.008
33	.213	.831	1.03	.235	.073	.025	.012
47	.124	.405	3.71	.431	.120	.034	.018
68	.071	.224	.905	.930	.213	.057	.029
100	.041	.124	.413	3.87	.349	.096	.044
150	.023	.066	.217	.867	.953	.171	.079
216	.015	.038	.124	.415	3.87	.301	.129
330	.009	.020	.061	.198	.787	.601	.220
400±0.1	.001	.002	.004	.012	.033	.062	.025
550	.006	.012	.031	.094	.315	3.95	.582
680	.005	.010	.025	.076	.240	1.75	.995
800±0.2	.004	.008	.021	.062	.194	1.03	1.77
1000	.004	.007	.017	.045	.145	.641	4.07
2000	.002	.003	.006	.018	.043	.164	.390

MARSHALL LABORATORIES
A SUBSIDIARY OF MARSHALL INDUSTRIES

Main Body Electronics, ML 337-1
OGO-F Triaxial S.C. Magnetometer
Part No. 708100 Test Procedure RO 68-164
Serial Number 2
Date 21 SEPT 1967
Data Sheet

Table 18F
(3.6.5, Spectrum Channel)

Spectrum Frequency Response, Y axis, +25°C.

Mode - Noncommutate

Measure seven level staircase with DVMand record the "step" channel voltage for each input frequency.

Index pulse = Manual
Gain = low
Set input such that output at 100 Hz = +4.0 ± 0.1 volts. e_{IN} = $\boxed{50}$ MV P-P

Frequency (Hz ± 1%)	Measured Channel Output Voltage (± 5%)						
	10	22	47	100	216	550	1000
6.8	.933	.218	.063	.024	.010	.004	.002
10	3.90	.423	.116	.040	.015	.005	.003
15	.845	.986	.216	.070	.026	.008	.004
22	.400	3.86	.419	.124	.040	.012	.006
33	.212	.835	.990	.233	.072	.021	.010
47	.123	.407	3.89	.430	.120	.031	.015
68	.071	.225	.969	.931	.212	.054	.026
100	.040	.125	.432	3.97	.396	.092	.040
150	.023	.066	.226	.866	.946	.168	.076
216	.014	.038	.129	.414	3.85	.300	.125
330	.008	.020	.063	.197	.804	.602	.215
400±0.1	.001	.001	.004	.012	.035	.066	.023
550	.005	.011	.032	.097	.320	3.92	.564
680	.004	.009	.026	.075	.244	1.72	.943
800±0.2	.004	.008	.021	.061	.196	1.02	1.61
1000	.003	.006	.018	.046	.146	.635	4.36
2000	.001	.002	.007	.016	.041	.159	.419

MARSHALL LABORATORIES
A SUBSIDIARY OF MARSHALL INDUSTRIES

Main Body Electronics, ML 337-1
OGO-F Triaxial S.C. Magnetometer
Part No. 708100 Test Procedure
Serial Number 2 RO-68-164
Date 21 Sept 1967

Data Sheet

Table 18G
(3.6.5, Spectrum Channel)

Spectrum Frequency Response, Z axis, +25°C

Mode - Noncommutate

Measure seven level staircase with DVM and record the "step" channel voltage for each input frequency.

Index pulse = Manual
Gain = low
Set input such that output at 100 Hz = +4.0 ± 0.1 volts. e_{IN} = $\boxed{50}$ mv p-p

Frequency (Hz ± 1%)	Measured Channel Output Voltage (± 5%)						
	10	22	47	100	216	550	1000
6.8	.890	.206	.063	.024	.010	.007	.006
10	3.84	.385	.116	.038	.015	.009	.007
15	.834	.911	.225	.069	.025	.011	.009
22	.402	3.10	.434	.123	.040	.016	.010
33	.213	.919	1.04	.234	.072	.024	.014
47	.125	.432	3.76	.436	.120	.034	.019
68	.072	.236	.908	.953	.212	.056	.027
100	.041	.130	.416	3.90	.401	.096	.042
150	.024	.069	.220	.846	.962	.172	.078
216	.016	.039	.126	.408	3.87	.302	.127
330	.009	.020	.062	.194	.770	.603	.217
490±0.1	.002	.002	.005	.014	.044	.089	.034
550	.006	.011	.032	.096	.312	3.95	.576
680	.006	.009	.026	.074	.239	1.69	.978
800±0.2	.005	.008	.021	.060	.193	1.01	1.92
1000	.004	.007	.017	.045	.144	.631	4.43
2000	.002	.003	.007	.016	.041	.160	.405

MARSHALL LABORATORIES
A SUBSIDIARY OF MARSHALL INDUSTRIES

Main Body Electronics, ML 337-1
OGO-F Triaxial S.C. Magnetometer
Part No. 708100 Test Procedure
Serial Number 2   40 68-164
Date 21 SEPT 1967

Data Sheet

Table 18H
(3.6.5 Spectrum Channel)

XWideband Test Point
Mode = Noncommutate
Index Pulse = 55.5 pps

Gain	Frequency (Hz)	e_{in} p-p	Measured E_{out} p-p -15°C	+25°C	+55°C	Required E_o
L	1 ± 0.01	250mv	3.2	3.3	3.2	3.3 ± 0.5
L	10 ± 0.1	± 0.5%	4.85	4.89	4.88	5.0 ± 0.3
L	100 ± 1	↓	4.95	4.95	4.89	5.0 ± 0.3
L	1000 ± 10	↓	5.43	5.41	5.33	5.4 ± 0.3
L	1850 ± 20	↓	4.78	4.75	4.68	4.9 ± 0.5
L	2500 ± 25	↓	3.02	2.97	2.93	3.0 ± 0.5
H	1 ± 0.01	25 mv	3.25	3.3	3.1	3.3 ± 0.5
H	10 ± 0.1	± 0.5%	4.73	4.87	4.87	5.0 ± 0.3
H	100 ± 1	↓	4.92	4.88	4.87	5.0 ± 0.3
H	400 ± 0.1	↓	.28	.30	.26	0.3 ± 0.1
H	1000 ± 10	↓	5.41	5.40	5.34	5.4 ± 0.3
H	1850 ± 20	↓	4.76	4.79	4.71	4.9 ± 0.5
H	2500 ± 25	↓	2.99	2.98	2.94	3.0 ± 0.5

MARSHALL LABORATORIES
A SUBSIDIARY OF MARSHALL INDUSTRIES

Main Body Electronics, ML 337-1
OGO-F Triaxial S.C. Magnetometer
Part No. 708100 Test Procedure
Serial Number 2
Date 21 Sept 1967 RO 68-164

Data Sheet

Table 18I
(3.6.5 Spectrum Channel)

YWideband Test point
Mode = Noncommutate
Index Pulse = 55.5 pps

Gain	Frequency (Hz)	e_{in} p-p	Measured E_{out} p-p -15°C	+25°C	+55°C	Required E_o
L	1 ± 0.01	250mv	3.2	3.3	3.2	3.3 ± 0.5
L	10 ± 0.1	± 0.5%	4.87	4.90	4.90	5.0 ± 0.3
L	100 ± 1		4.97	4.95	4.92	5.0 ± 0.3
L	1000 ± 10		5.43	5.42	5.36	5.4 ± 0.3
L	1850 ± 20		4.77	4.73	4.67	4.9 ± 0.5
L	2500 ± 25		2.96	2.94	2.90	3.0 ± 0.2
H	1 ± 0.01	25 mv	3.2	3.3	3.1	3.3 ± 0.5
H	10 ± 0.1	± 0.5%	4.73	4.89	4.88	5.0 ± 0.3
H	100 ± 1		4.93	4.88	4.86	5.0 ± 0.3
H	400 ± 0.1		.28	.30	.30	0.3 ± 0.1
H	1000 ± 10		5.37	5.38	5.34	5.4 ± 0.3
H	1850 ± 20		4.72	4.72	4.67	4.9 ± 0.5
H	2500 ± 25		2.93	2.95	2.89	3.0 ± 0.5

340

MARSHALL LABORATORIES
A SUBSIDIARY OF MARSHALL INDUSTRIES

Main Body Electronics, ML 337-1
OGO-F Triaxial S.C. Magnetometer
Part No. 708100 Test Procedure
Serial Number 2
Date 21 SEPT 1967
Data Sheet
RO 68-164

Z Wideband Test point
Mode = Noncommutate
Index Pulse = 55.5 pps

Table 18J
(3.6.5 Spectrum Channel)

Gain	Frequency (Hz)	e_{in} p-p	Measured E_{out} p-p -15°C	+25°C	+55°C	Required E_o
L	1 ± 0.01	250mv ± 0.5 %	3.2	3.3	3.2	3.3 ± 0.5
L	10 ± 0.1		4.86	4.90	4.89	5.0 ± 0.3
L	100 ± 1		4.95	4.95	4.90	5.0 ± 0.3
L	1000 ± 10		5.44	5.42	5.36	5.4 ± 0.3
L	1850 ± 20		4.73	4.71	[illegible]	4.9 ± 0.5
L	2500 ± 25		2.94	2.92	[illegible]	3.0 ± .2
H	1 ± 0.01	25 mv ± 0.5 %	3.2	3.3	3.1	3.3 ± 0.5
H	10 ± 0.1		4.71	4.84	4.57	5.0 ± 0.3
H	100 ± 1		4.88	4.88	4.82	5.0 ± 0.3
H	400 ± 0.1		.31	.36	.40	0.3 ± 0.1
H	1000 ± 10		5.35	5.36	5.29	5.4 ± 0.3
H	1850 ± 20		4.67	4.68	4.62	4.9 ± 0.5
H	2500 ± 25		2.90	2.90	2.87	3.0 ± 0.5

34

MARSHALL LABORATORIES
A SUBSIDIARY OF MARSHALL INDUSTRIES

Main Body Electronics, ML 337-1
OGO-F Triaxial S.C. Magnetometer
Part No. 708100 Test Procedure
Serial Number 2
Date 21 SEPT 1967 RO 6d-164
Data Sheet

Table 19A
(3.6.6 SCO Channel)

SCO output amplitude
Input signal = 0.0 volts

SCO Status	Measured output (peak - peak)			Required output p-p
	-15°C	+25°C	+55°C	
ON	4.9V	5.0V	4.9V	5±0.25 volts
OFF	6mv*	6mv	6mv*	less than 1 mv

* KNX

SCO Center frequencies
Input signal = 0.0 volts

	Discriminator Output			Required center frequency	Allowable Discriminator Output
	-15°C	+25°C	+55°C		
X.	+10mv	-4mv	-34mv	40.0KHz±0.2%	± 35mv
Y	+33mv	-5mv	-36mv	52.5KHz±0.2%	± 35mv
Z	+40mv	+15mv	-38mv	70.0KHz±0.2%	±70mv

342

MARSHALL LABORATORIES
A SUBSIDIARY OF MARSHALL INDUSTRIES

Main Body Electronics, ML 337-1
OGO-F Triaxial S.C. Magnetometer
Part No. 708100 Test Procedure
Serial Number 2
Date 21 SEPT 1967
Data Sheet

0-68-164

Table 19B

(3.6.6 SCO Channel)

Modulation Measurement
Input frequency = 100 ± 1 Hz
Input amplitude = 250 mv p-p ± 1%
Spectrum gain = Low
Measure outputs p-p at rear of monitor unit on J4, J5, and J6

	Measure Output at	Measured Output peak-peak			Required Output Volts (peak to peak)
		-15°C	+25°C	+55°C	
X	J4	2.50	2.500	2.490	2.50 ±50 mv
Y	J5	1.662	1.680	1.675	1.65 ±35 mv
Z	J6	2.50	2.520	2.520	2.50 ±50 mv

Table 20

(3.6.7 External IFC)

External Input Amplitude = 1.00 ± 0.01 volts p-p
Frequency= 1 ± 0.1KHz

Measured Output p-p			Required Output Volts
-15°C	+25°C	+55°C	
10mv	10mv	10mv	10.0 ± 0.5 mv p-p

343

MARSHALL LABORATORIES
A SUBSIDIARY OF MARSHALL INDUSTRIES

Main Body Electronics, ML 337-1
OGO-F Triaxial S.C. Magnetometer
Part No. 708100 Test Procedure
Serial Number 2
Date 22 Sept 67

RO 68-164

Data Sheet

NOTES & REMARKS:

Input • 1FC Signal   Spectrum Output

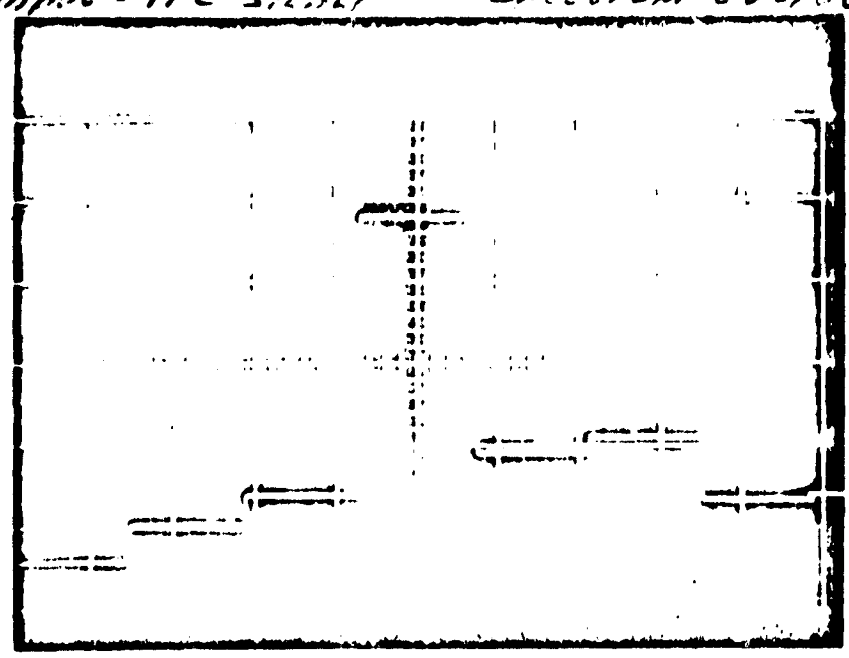

.2v/cm →

| 10 | 22 | 47 | 100 | 210 | 550 | 1kc |

12.5 ms/cm →

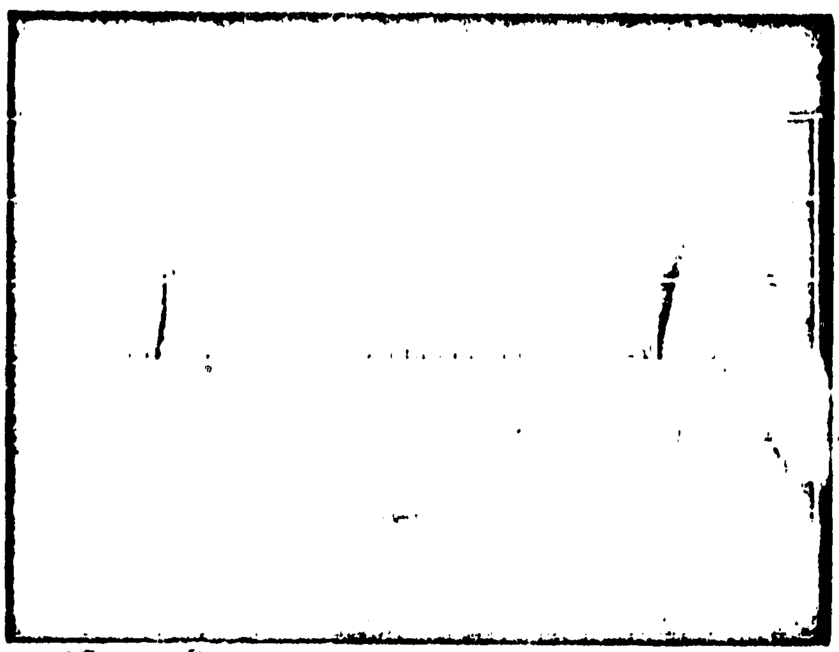

20mv/cm →

50 V Pulse on 28V Line.
Para 3.6.2.2.   10ms/cm →

MARSHALL LABORATORIES
A SUBSIDIARY OF MARSHALL INDUSTRIES

Data Sheet
Search Coil Sensor Assembly
ML-338
OGO-F-22

S/N 4 Date Aug 17, 1967

Total Wt. 157.3 grams Tested By J. Ward

Initial Tests (At room temperature)	
Preamplifier Gain (A_p)	100
+20 volt current drain	1.82 ma
D. C. Offset voltage	-665 mv
IFC - Output to input ration @ 100 Hz	1.00
Maximum Undistorted Output @ 1 K Hz	26 V p-p
Sensor Assembly Sensitivity	10.03 μv/γ Hz
Sensor Coil Resistance	48.0 K ohms

Temperature, °C	-50	0	+10	+60
D. C. Offset Voltage	-.714	-.676	-.692	-.650
+20 volt current ma	11	10.2	1.65	1.95

Form ML 4-70 (6-67)

MARSHALL LABORATORIES
A SUBSIDIARY OF MARSHALL INDUSTRIES

DATA SHEET
SEARCH COIL SENSOR ASSEMBLY
ML-338
OGO-F-22

Amplifier Gain Frequency Response 1.00 volt rms input to IFC

Freq. Hz \ Temp. °C	-50	+25	+60
10	1.00	1.00	1.00
100	1.00	1.00	1.00
700	.925	.940	.950
1.0K	.870	.880	.900
1.85K	.700	.720	.750
2.0K	.670	.690	.720
5.0K	.355	.360	.388
10 K	.191	.190	.206
20 K	.099	.098	.106

Sensor - Preamp Frequency Response at +25°C. E_o = 1.00V RMS

Freq. Hz	E_{in} volts rms	Freq. Hz	E_{in} volts rms
10	14.5	500	.357
20	7.40	f_o = 977	.253
50	3.00	1.0 K	.253
100	1.50	2.0 K	.534
200	.790	5.0 K	3.55

MARSHALL LABORATORIES
A SUBSIDIARY OF MARSHALL INDUSTRIES

DATA SHEET
SEARCH COIL SENSOR ASSEMBLY
ML - 338
OGO -F- 22

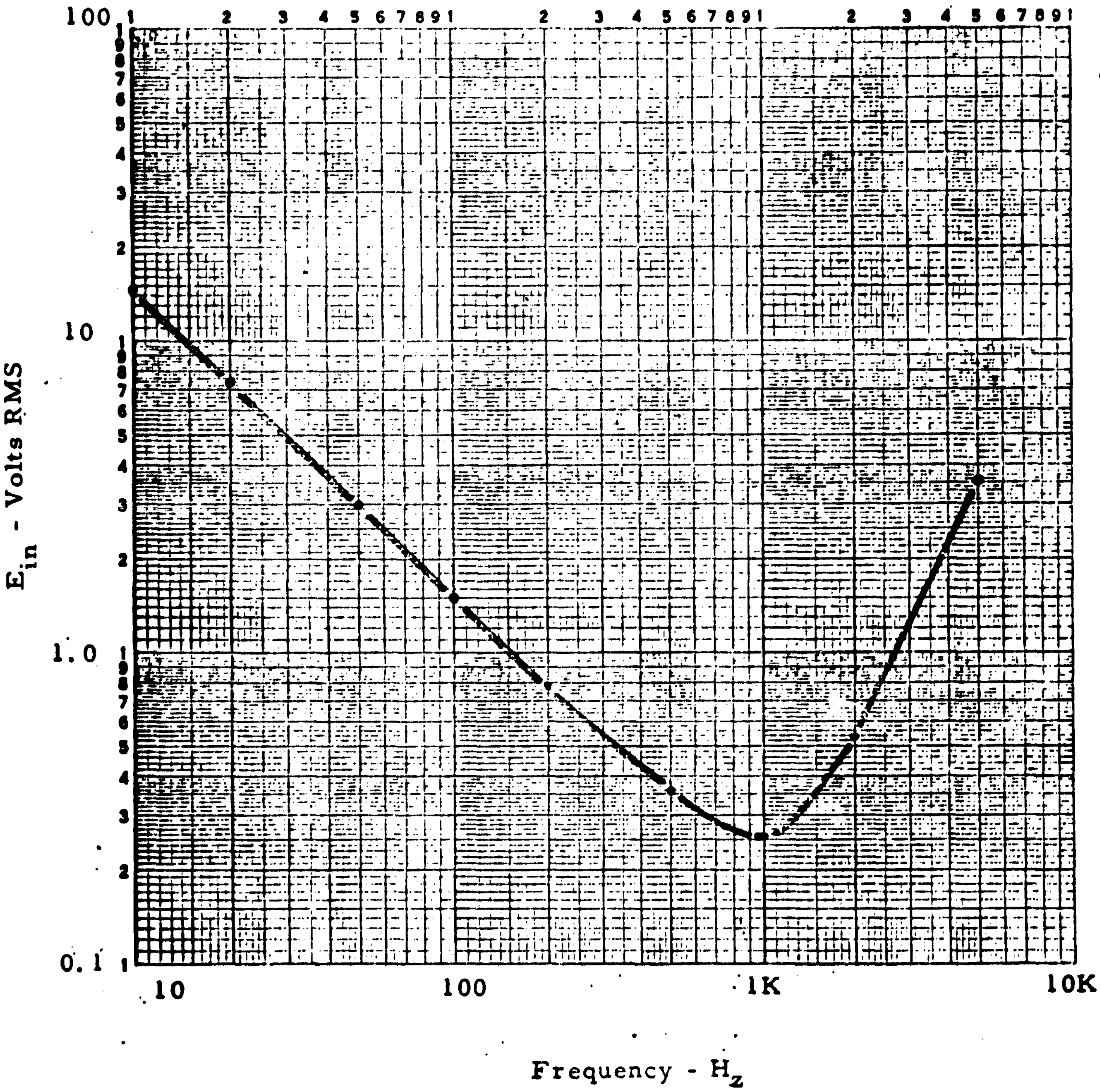

RO 68-164